NO. 82 NOTES FROM THE SHOP $3.95

Woodsmith®

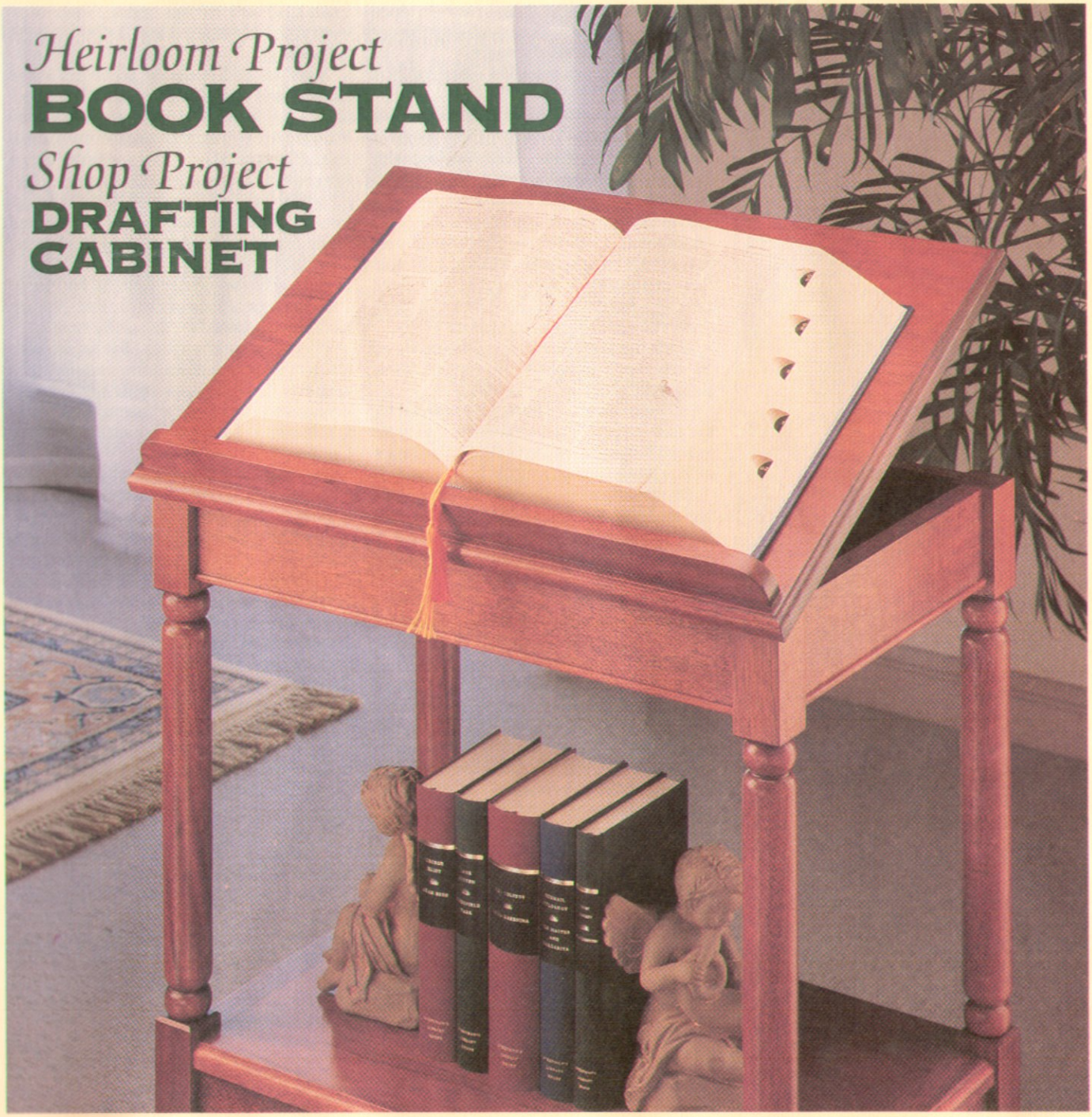

Heirloom Project
BOOK STAND
Shop Project
DRAFTING CABINET

No. 82 August, 1992

Woodsmith®

Editor Donald B. Peschke
Managing Editor Douglas L. Hicks
Assistant Editors James M. Dolan, Gordon Gaippe, Philip A. Totten

Creative Director Ted Kralicek
Art Director Rod Stoakes
Senior Illustrators David Kreyling, Chris Glowacki
Illustrators Dirk Ver Steeg, Cinda Shambaugh
Contributing Illustr. Robert H. Whitmer
Photographer Crayola England
Design Director Ken Munkel
Designers Jan Hale Svec, Kent Welsh
Shop Manager Steve Curtis

Circulation Director Liz Bredeson
Subscription Manager Sandy Baum
Circulation Analyst Jim Woodson
Newsstand Sales Kent A. Buckton

CORPORATE SERVICES
Controller Paul E. Gray
Accounting Linda O'Rourke
Bookkeeping Julianne Spears
Network Administrator Douglas M. Lidster
Administrative Assts. Cheryl A. Scott, Julia Fish
Receptionist Jeanne Johnson
Building Maintenance Ken Griffith, Archie Krause

WOODSMITH SOURCEBOOK
Marketing Director Robert Murry
Art Director Cindy Jackson
Customer Service Mgr. Laura McNelly
Project Supplies Leslie Ann Gearhart, Linda Jones
Technical Support Jonathan Garbison
Systems Operator Linda Morrow
Receptionist Keri Lee

CUSTOMER SERVICE
Jennie Enos (Supervisor), Jeff Janes, Joy Johnson, Sara Johnson, Ami Blanshan

SHIPPING DEPARTMENT
Jerry Carson (Supervisor), Gloria Sheehan, Ronald Long, Donnie McVey, Chuck Carlson

WOODSMITH STORE
Des Moines, IA Dave Larson, Mgr.

Woodsmith® (ISSN 0164-4114) is published bimonthly (Feb., April, June, Aug., Oct., Dec.) by Woodsmith Corporation, 2200 Grand Ave., Des Moines, IA 50312. Printed in U.S.A.
Woodsmith® is a registered trademark of Woodsmith Corp. Copyright© **1992** Woodsmith Corporation. All rights reserved.
Subscriptions: Single copy: $3.95. One year subscription (6 issues), $17.95. Two years (12 issues), $31.95. (Canada/Foreign $21.95 per year, U.S. funds.)
Second Class Postage Paid at Des Moines, IA and at additional offices.
Postmaster: Send change of address to *Woodsmith*, Box 10718, Des Moines, IA 50350.
Subscription Questions? Call 1-800-333-5075, 8:00 am to 5:00 pm, Central Time, weekdays.

EDITOR'S COLUMN

Sawdust

When I say, "move the fence just a smidgen" or "sneak up on the cut," most woodworkers would know what I'm talking about.

We're often faced with the problem of making cuts that can't easily be measured. Even worse, actually trying to move a fence a very small increment and making the cut is not an easy accomplishment.

So, how do you move a fence just that little smidgen?

The best solution we've found is to use a fence designed by a woodworking friend of mine, Mark Duginske. Mark worked with us on the technique for cutting dovetails on the band saw (see *Woodsmith* No. 66).

The technique he developed requires sneaking up on the cut so the dovetail pins fit perfectly into the tails. One way to do this is to cut in the waste area with the workpiece against a fence. Then, if the fit is too tight, move the fence over a hair and try again.

Mark ran into the same problems we all do. It's nearly impossible to move a fence just a smidgen with any accuracy.

His solution was to design a new fence for the band saw — one that is very easy to move in small amounts. That's the fence we're showing on page 13.

The theory is simple. Just use two opposing wedges. As the wedges slide against each other, the face of the fence moves. Depending on the angle of the wedges, this can be an incredibly small distance.

The angle we chose allows you to slide the wedge 1" in order to move the fence just 1/16". Or, slide the wedge 1/8" to move the fence 1/128". Now that's just a smidgen.

I haven't seen a fence like this before. It adds a great deal of accuracy to using a band saw. And it can easily be adapted to a drill press or other machines. It's pretty easy to knock one out. You may want to give it a try to see how fine you can make adjustments.

DESIGN OPTIONS. Whenever we design a project, we go through a lot of changes. But the more options, the more confusion . . . until it all comes together at the end.

A classic example of the problems of design options came up when we started on the Book Stand. It began as a dictionary stand with an angled top and turned legs.

I liked the initial sketches, but we decided to look at options. The first option had to do with the turned legs.

Turned legs require a lathe, which fewer than half of *Woodsmith* readers own. So what about those readers who don't have a lathe and still want to build this project?

We decided to try another version with tapered legs you could make on a table saw. I was glad we tried this option. Some of us even liked the tapered legs better than the turned legs.

Next, we had to decide if the top of the Book Stand would be permanently angled. That's the traditional look, and it's what I thought I'd like. But the angled top limited its usefulness. So we tried a version with a hinged top that could be tilted up or lie flat.

Again, I was glad we tried the second option . . . I like the looks of the Book Stand when the top is lying flat. It makes a great Side Table. (See page 32.)

Both of these design options had to do with the appearance of the project. But just as often, we make functional changes.

Why all these changes? That became the subject of quite a discussion one day. The result is the article on page 28. Here we decided to spend some time talking about what was involved in designing the Drafting Cabinet shown on page 22.

You may have wondered why we choose a certain look, or certain measurements, or joinery, or hardware. In almost every case, we look at many options. Once a decision is made, it may be changed several times because of other decisions along the way. This article on design should give you an idea of the process we go through.

NEW FACES. Besides publishing two magazines on woodworking (*Woodsmith* and *ShopNotes*), we also have a retail store here in Des Moines. One of our best customers was a guy by the name of Dave Larson. Dave spent so much time in the store, we began to think he was one of the employees.

When Kent Welsh (who was then the store manager) decided to move to our design department, it was natural to ask Dave to take over running the store. He was delighted, and so are we.

Dave is looking forward to continuing the great job Kent did in building the store to one of the most complete stores for woodworkers in the country.

If you're ever in Des Moines, stop in and say "Hi" to Dave. He'll be glad to show you around the store.

Don

A LOOK INSIDE

Contents

Tips & Techniques 4 *Five great tips. 1) Drilling Out Mortises. 2) Carriage for Bevels. 3) Dimpled Splines. 4) Router Table Push Block. 5) Containers for Mixing.*

Book Stand 6 *The legs are made on a lathe in short, easy-to-turn sections. And the top lies flat or tilts — thanks to a shop-made ratchet system.*

Square Leg Design 12 *The Book Stand can also be built with square legs. No lathe needed.*

Micro-Adjustable Fence 13 *This fence can be made to fit any band saw table. A sliding wedge system allows precise adjustments.*

Shop Notes 16 *1) A Template for Turning Spindles. 2) Band Saw "Drift." 3) Drilling into the End of Long Stock. 4) Enlarging a Round Tenon. 5) Checking for Square.*

Cutting Plywood 18 *The results are in for our Shop Tips Contest. The winners: A Circular Saw Edge Guide, T-Square Router Guide, and an A-Frame Support.*

Talking Shop 20 *Answers to questions from readers. 1) Avoiding Blotchy Stain. 2) Steamed Cherry. 3) Saw Blade Selection. 4) Tempered Hardboard.*

Drafting Cabinet 22 *The front of this cabinet pivots down on steel pins to a comfortable height for drawing.*

Notes on Design 28 *What goes into the design of a Woodsmith project? Here's a look at the evolution of the Drafting Cabinet.*

Sources 31 *Hardware and supplies needed for the projects in this issue.*

Book Stand *page 6*

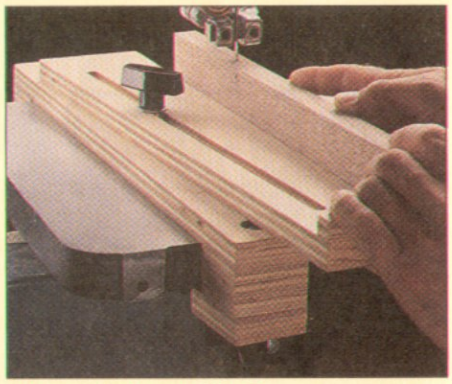

Micro-Adjustable Fence *page 13*

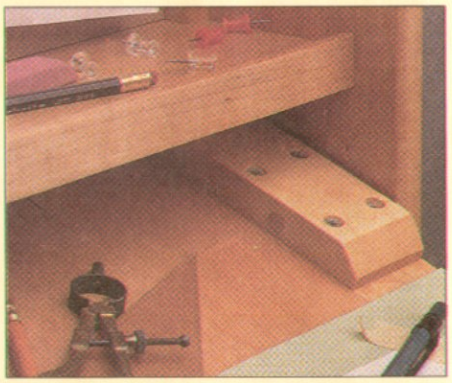

Drafting Cabinet *page 22*

Tips & Techniques

DRILLING OUT MORTISES

■ Recently, I had to cut a number of mortises. So I chucked a brad point bit in my drill press and drilled a series of holes along the layout marks on the stock, see Fig. 1. But when I tried to remove the waste between the holes, there was a problem.

Every time I drilled a hole that overlapped another hole, the drill bit would wander or pull into the already drilled hole. So I couldn't finish drilling straight down to the bottom of the mortise. This left me with a lot of chisel work to remove the waste and flatten the bottom.

To solve the problem, I tried drilling a 1/16" pilot hole between the other holes, see Fig. 2. Then when I switched back to the larger brad point bit, the point stayed in the pilot hole no matter how much the bit overlapped the adjacent hole, see Fig. 3.

Even though it takes a little time to drill the pilot holes, this method saves more time than it takes to chisel all that waste material out of the mortise.

I. C. Dupuis
Hart, Minnesota

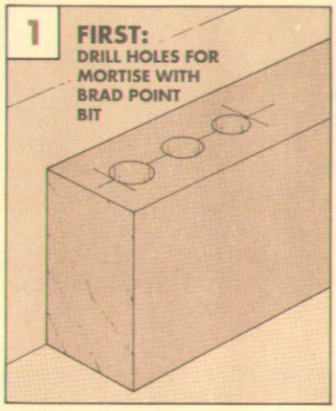

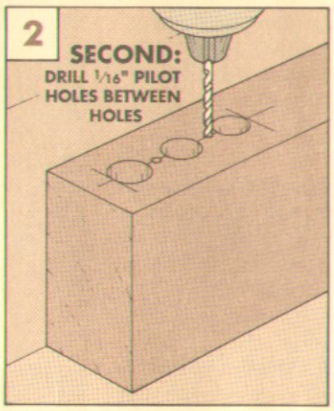

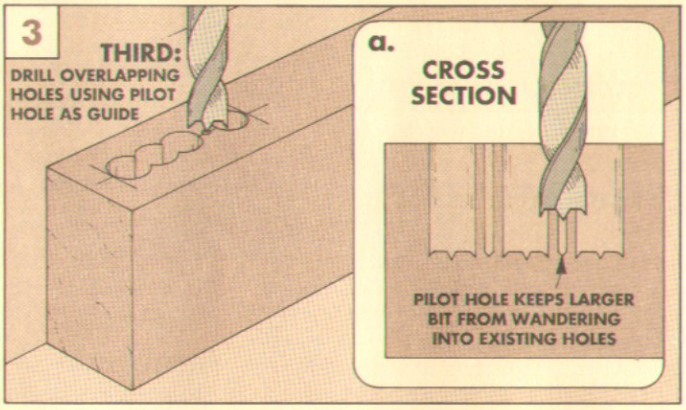

CARRIAGE FOR BEVELS

■ I needed to bevel the edges of a narrow workpiece for a project I was working on. Beveling the first edge was easy using the rip fence on the table saw. But when I tried to bevel the other side, the sharp edge of the first bevel jammed under the rip fence.

To cut the second bevel, I built a carriage, see Fig. 1. The workpiece rests on the carriage, and the two are pushed along the fence together. This way the edge on the first bevel can't get jammed under the fence. And it's protected from damage.

I made a carriage with a plywood fence and a Masonite base, see Fig. 1a. Start with a base that's wider than the workpiece. This prevents tearout along the edge as you cut the bevel.

Roman D. Hershberger
Millersburg, Ohio

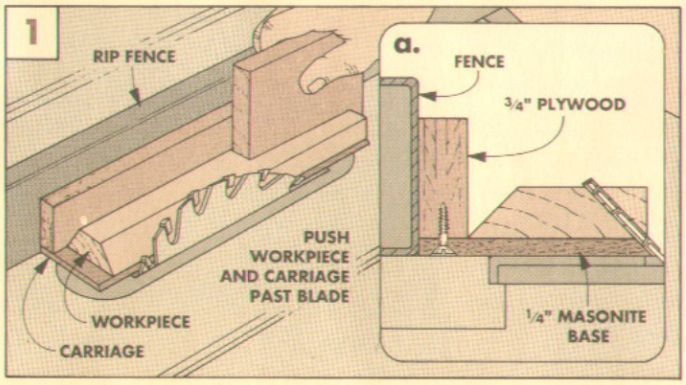

DIMPLED SPLINES

■ I recently built a large cabinet using mortise and spline joinery. I made the splines from the same hardwood as the cabinet, and sized them for a tight fit in the mortises. But because of the fit, I was concerned about getting enough glue into the joint.

To get around this problem, I dimpled the splines, see Fig. 1a. These little indentations then carried enough glue into the mortise to ensure a strong joint.

Dimpling the splines is easy. I use a coarse wood rasp, a mallet, and a piece of scrap, see Fig. 1. With the spline on my bench, I position the rasp on top of the spline. Then I strike the rasp sharply with the mallet, using the scrap to protect the tools from being damaged.

Howard B. Simpkins
Northridge, California

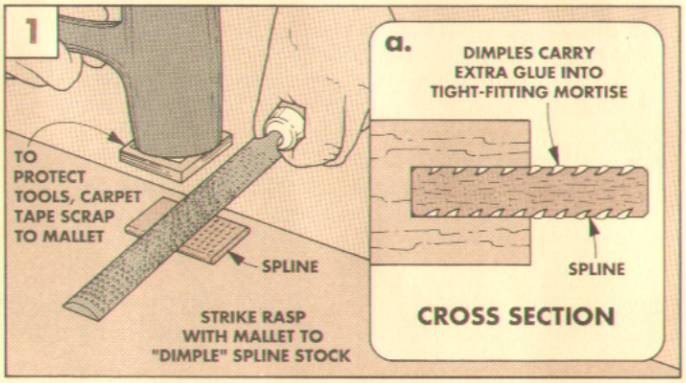

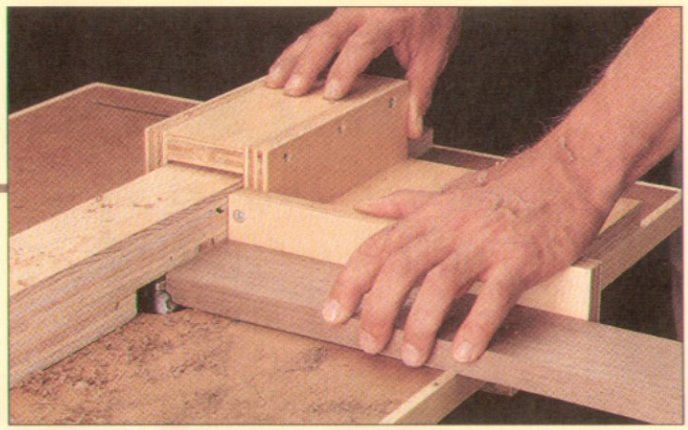

ROUTER TABLE PUSH BLOCK

■ Routing the ends of long or narrow pieces of wood can be tricky. Normally you'd use a miter gauge on the router table to hold the stock as it passes through the router bit. But I didn't want to rout a miter gauge slot in my router table top. So I came up with a push block that slides over my router table fence, see photo.

The most important part of this push block is a close-fitting "saddle" that slides over the fence. The U-shaped saddle is made up of three pieces of ¾"-thick plywood, see Fig. 1.

The key is cutting the pieces of the saddle to fit your router table fence exactly, see Fig. 2. They have to be sized just right — loose enough to allow the push block to slide along the fence, but tight enough so there isn't any play.

(Waxing the inside faces of the saddle pieces also helps the push block slide smoothly.)

After making the saddle, I attached a square block of ¾" plywood, see Fig. 1. This is the part of the push block that actually guides the workpiece through the bit. So the leading edge of the block must be 90° to the fence to get an accurate cut.

I also screwed a strip of scrap wood to the leading edge of the push block, see Fig. 1. This makes it easier to hold the workpiece tightly against the push block. And it backs up the workpiece to help prevent chipout.

Note: I used screws so it would be easy to replace the strip when it gets chewed up. Be sure the screws are well away from where the bit will cut.

Harry Rudin
Oberrieden, Switzerland

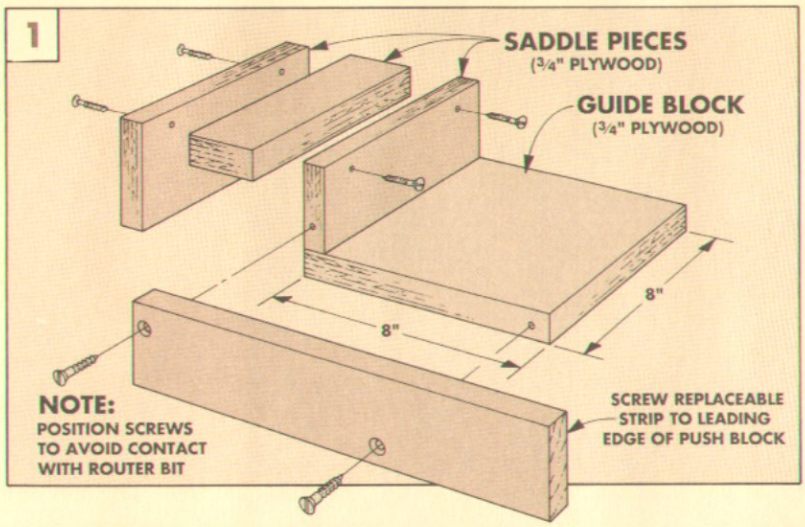

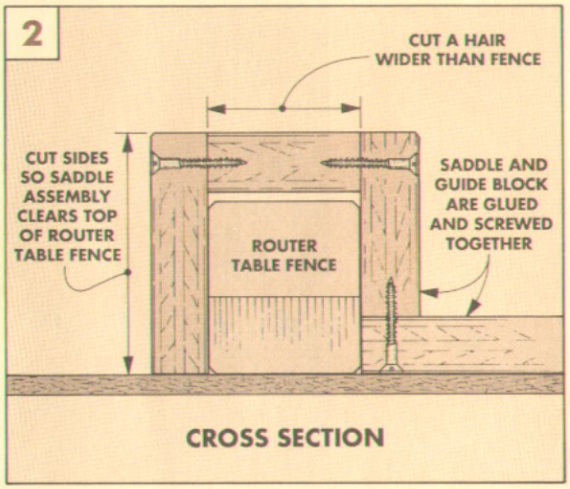

CONTAINERS FOR MIXING

■ Woodworkers often need containers to mix small amounts of liquids, such as when mixing epoxy. *Dr. S. H. McDonnieal, Jr.*, of Jackson, Mississippi uses 1 oz. (30cc) plastic disposable medicine cups for this purpose. These little cups have raised graduation marks on the sides so you can accurately see and mix small amounts of liquids, see drawing.

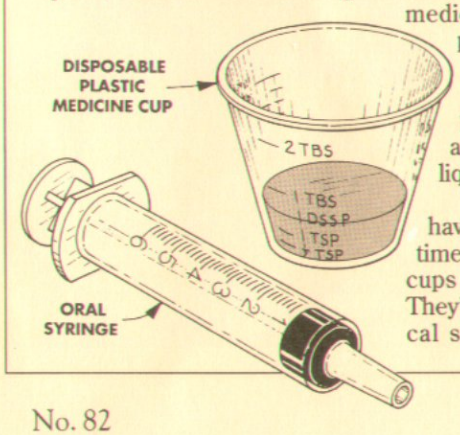

The bad news is that you have to buy at least 100 at a time. The good news is 100 cups only cost about $1.30. They're available from medical supply companies and some drug stores.

While at the drug store looking for medicine cups, you might come across another inexpensive way to accurately mix small amounts of liquids — an oral syringe for infants, see drawing.

This is normally used to measure and give liquid medicine to babies. But it can also be used to measure small amounts of different stains to make a custom color stain.

The syringes are easy to disassemble and clean, so they're reuseable. They cost about $2.00.

SEND IN YOUR TIPS

If you would like to share an original tip or idea with other woodworkers, just send it to *Woodsmith*, Tips and Techniques, 2200 Grand Ave., Des Moines, Iowa 50312.

We will pay (upon publication) $15 to $100, depending on the published length of the tip. Please include an explanation, a photo or sketch (we'll draw a new one), and a daytime telephone number, in case we have some questions.

Book Stand

A clever shop-built ratchet makes the angle of the bookrest easily adjustable. And the legs are made in short, easy-to-turn sections, rather than one long piece.

Typically, legs like the ones on this Book Stand would be turned from single pieces of stock. But pieces this long (about 40" long, including waste at the ends) are too long to fit on most lathes. Instead, I made each leg from four shorter pieces: two turned sections and two square sections, see Exploded View on opposite page.

To connect the parts of the legs, round tenons on the turned sections fit in holes drilled in the square sections. In addition to making the legs easier to turn, this method also makes assembly much simpler. (Note: We've also included a square leg design that doesn't require turning, see page 12.)

TOP. The top of the Book Stand is adjustable from flat to 45° with four positions in between, thanks to a shop-built ratchet.

SHELF. Another unique feature of the Book Stand is the shelf — it's made like a breadboard. This design lets the solid wood shelf expand and contract with changes in humidity without damaging the stand.

WOOD AND FINISH. I built the Book Stand from solid plantation-grown Honduras mahogany. It looks like forest-grown mahogany, but slightly pinker. Rather than wait a few years for it to darken naturally, I used a deep, dark cherry stain to "age" it. And added a satin polyurethane top coat.

EXPLODED VIEW

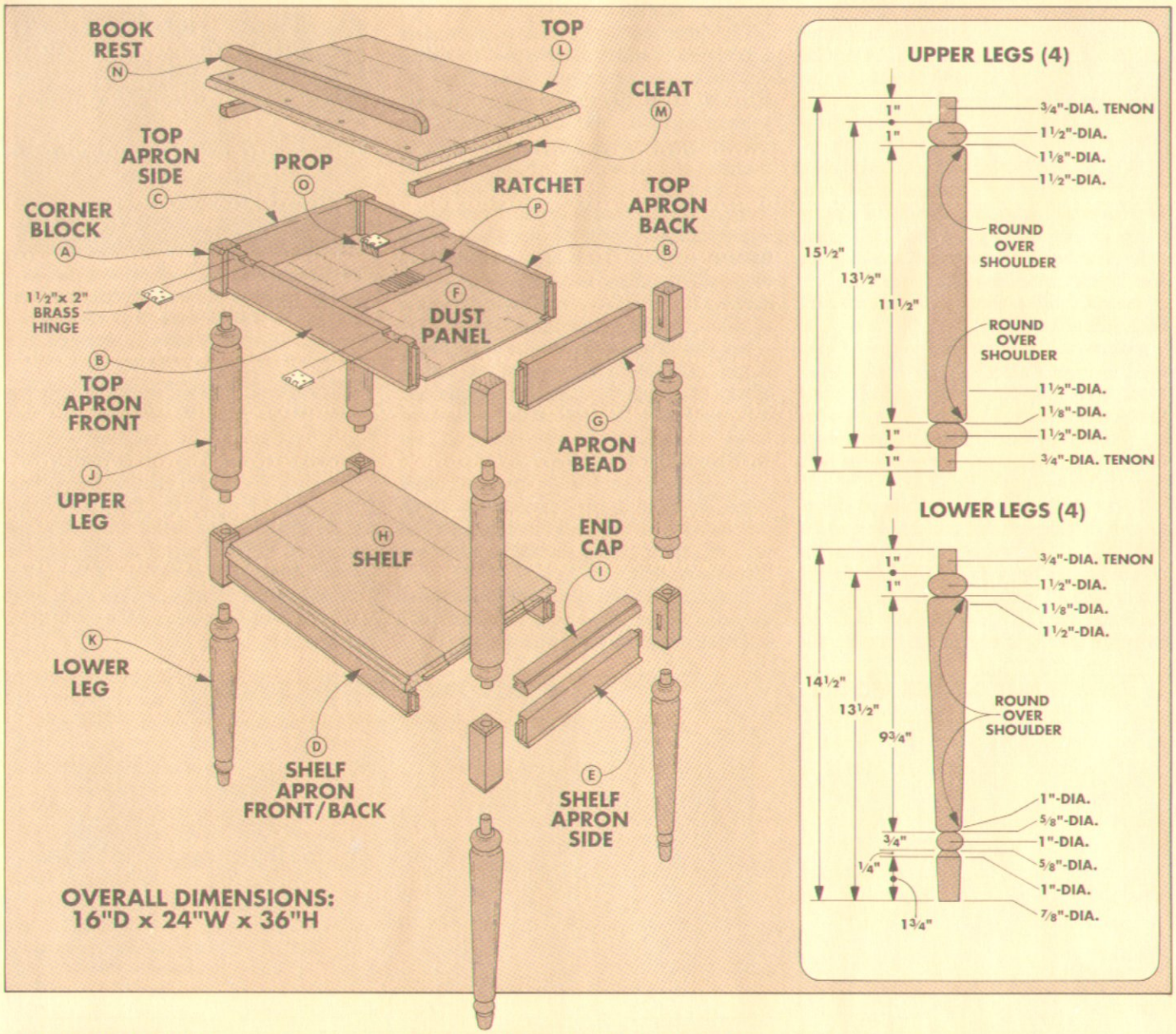

MATERIALS

A	Corner Blocks (8)	1½ x 1½ x 3½
B	Top Apron Fr./Bk. (2)	¾ x 2¾ x 20¾
C	Top Apron Sides (2)	¾ x 2¾ x 12¾
D	Shelf Apron Fr./Bk. (2)	¾ x 1½ x 20¾
E	Shelf Apron Sides (2)	¾ x 1½ x 12¾
F	Dust Panel (1)	¼ ply-13¼ x 21¼
G	Apron Bead	¼ x ⅞ x 12' rgh
H	Shelf (1)	¾ x 14¾ x 20¾
I	End Caps (2)	¾ x 1⅜ x 12
J	Legs (Upper) (4)	1½ x 1½ x 15½
K	Legs (Lower) (4)	1½ x 1½ x 14½
L	Top (1)	¾ x 16 x 24
M	Cleats (2)	¾ x 1 x 11½
N	Book Rest (1)	⅝ x 1¼ x 23
O	Prop (1)	¾ x 1½ x 7½
P	Ratchet (1)	¾ x 1½ x 12¾

CUTTING DIAGRAM

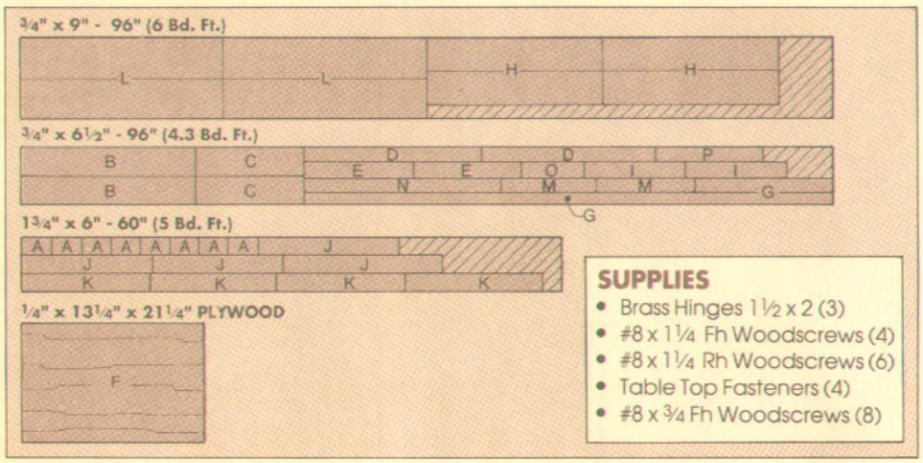

SUPPLIES

- Brass Hinges 1½ x 2 (3)
- #8 x 1¼ Fh Woodscrews (4)
- #8 x 1¼ Rh Woodscrews (6)
- Table Top Fasteners (4)
- #8 x ¾ Fh Woodscrews (8)

CORNER BLOCKS

I built the Book Stand in four main sections, beginning with the top frame and the shelf frame. (Later, I added the legs and the top.)

The top and shelf frames start with four **corner blocks (A).** All eight blocks are the same size, see Figs. 1 and 2. The main difference between the top blocks and the shelf blocks is the length of the mortises cut in them for the tenons on the aprons, see Figs. 1a and 2a.

MORTISES. To cut out the mortises, I used the drill press. But it's difficult to hold a short block while mortising. So instead of cutting the blocks to finished length before mortising, I made up four 7½"-long blanks, each long enough for two corner blocks with waste in between, see Fig. 3.

To cut out the mortises, first clamp a fence to your drill press table and adjust it so the width of the blank will be centered under the drill bit. (For a tip on how to do this, see the box at right.) Then clamp two stop blocks to the fence, see Fig. 3. The left stop block determines the right end of the mortise, the right stop block is for the left end.

Once the stop blocks are in position, drill a hole at each end of the mortise. Then drill out the waste in between. Now, rotate the blank 90° to cut a mortise on an adjacent face.

Next turn the blank end-for-end, and without changing the set-up, cut mortises at the other end of the blank to form the second corner block.

Since the mortises on the shelf blocks are shorter than those on the top blocks, you'll have to change the position of the stop blocks after cutting the mortises in two of the blanks. Once the mortises are complete in all four blanks, cut the blocks to length.

HOLES FOR ROUND TENONS. The next step is to drill holes in the ends of the corner blocks to accept the round tenons on the legs, see Fig. 4. The top corner blocks have holes in the *bottom* end only, see Fig. 4a. The shelf blocks have holes in *both* ends.

To drill the holes, I used a fence and three stops blocks on the drill press table. To do this, center a corner block directly under the drill bit, then clamp the fence and stop blocks around it, see Fig. 4.

After drilling a hole, you need to take away only one of the stop blocks to remove the workpiece and replace it with the next.

QUICK TIP

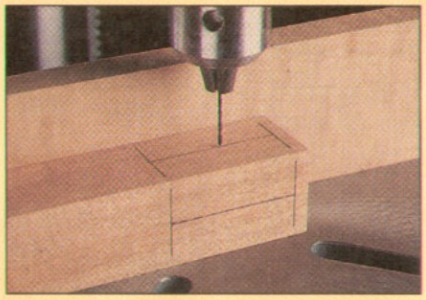

To center a drill bit on thickness of stock, set the fence so a small bit touches the centerline. To re-check, flip stock end-for-end. Then switch to a mortising bit.

CHAMFERING. The last step in making the corner blocks is to chamfer the ends, see Fig. 5. But there's a difference between the top blocks and the shelf corner blocks.

The shelf blocks are chamfered on all four edges at both ends. On the top corner blocks, all four edges on the bottom end are chamfered. But only two of the edges on the top end need to be chamfered: the two at the front edge of the front blocks, see Figs. 1 and 5. (This allows clearance for the top to tip at an angle, refer to Fig. 22a.)

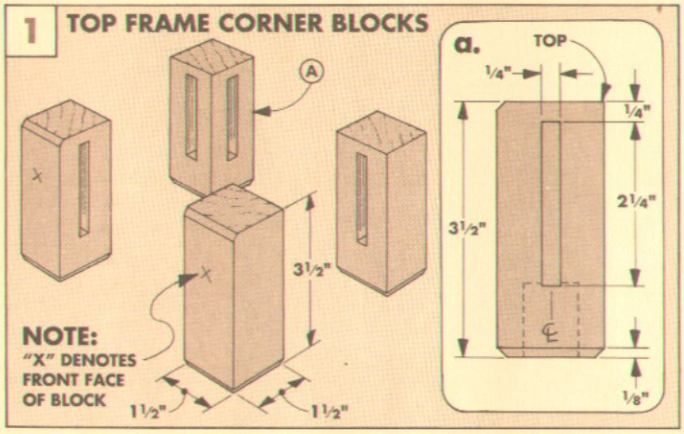

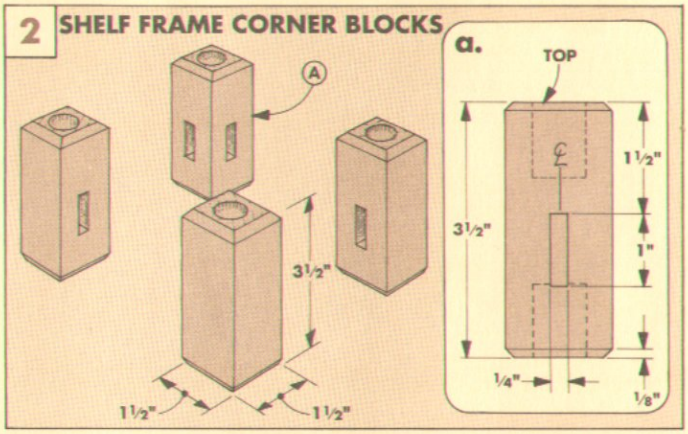

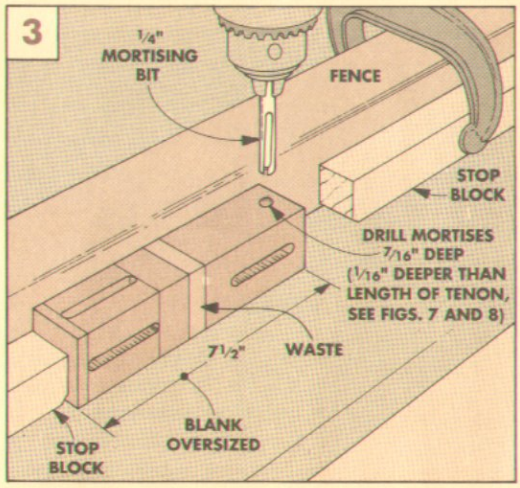

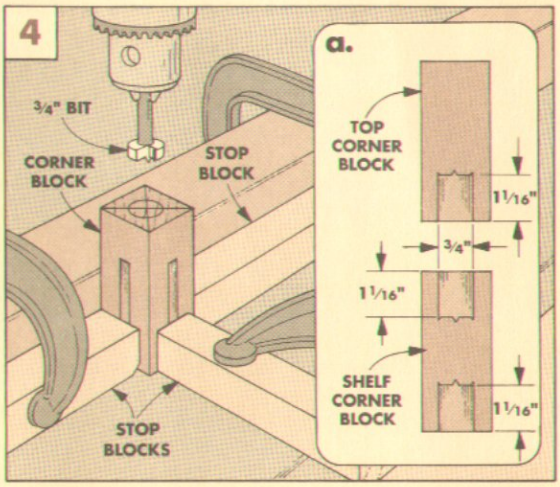

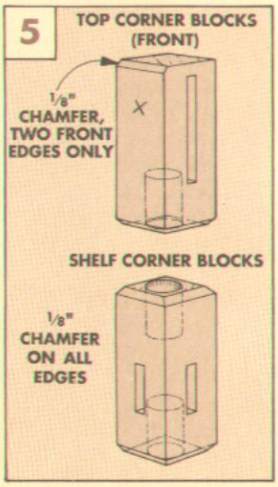

TOP FRAME/SHELF FRAME

Once the corner blocks are finished, the next step is to make the four **top aprons (B and C)** and the four **shelf aprons (D and E)**.

All the aprons are the same thickness and length (including tenons), see Fig. 6. The only difference is their width — the top aprons are *wider* than the shelf aprons.

So begin by cutting the top and shelf aprons to finished size.

TENONS. Next, I used the table saw to cut the tenons on the ends of the aprons.

To begin, cut a tenon on a test piece. I start by cutting the tenon a little too thick and checking the fit in the mortise. Then I reset the saw and re-cut the tenon. This way, I can sneak up on the size for a tight-fitting tenon.

Once you've determined the correct size, cut tenons on both ends of the aprons. All the tenons are 3/8" long and cut to fit the mortises in the corner blocks, see Figs. 7, 8, and 9.

TOP FRAME. At this point, I set aside the parts for the shelf frame and focused on the top frame. Begin by cutting a groove on the inside face of the top aprons to accept a 1/4" plywood dust panel, see Fig. 7. Size the groove to fit the thickness of the plywood. (Actual thickness of 1/4" plywood varies.)

Now measure for the dust panel. To be sure of a good fit, first dry assemble the frame and measure the opening, including the depth of the grooves, see Fig. 6.

Now cut the **dust panel (F)** to fit in the grooves. Then, notch out the corners of the panel to fit snugly around the corner blocks, see Fig. 10.

HINGE MORTISES. There's one more step before gluing the top frame together — mortising the front apron for the hinges that hold the top of the Book Stand, see Fig. 11. The hinges are fully mortised into the top edge of the apron — there isn't a mortise in the bottom face of the top.

To do this, I "nibbled" out the mortises in a series of passes on the table saw.

Now you can glue up the top frame. Start by gluing the side aprons and corner blocks together. After the glue is dry, assemble the sides to the front and back aprons with the dust panel in place, and check the frame for square, see Shop Notes, page 17.

SHELF FRAME. The next step is to glue up the shelf frame. It's assembled in the same way as the top frame, except there isn't a dust panel, see Fig. 6.

BEADING. Once the top and shelf frames are glued up, add a decorative **bead (G)** to the bottom edge of the aprons, see Figs. 6 and 6a. Cut the beading to fit between the corner blocks, and glue it to the bottom edge of the aprons.

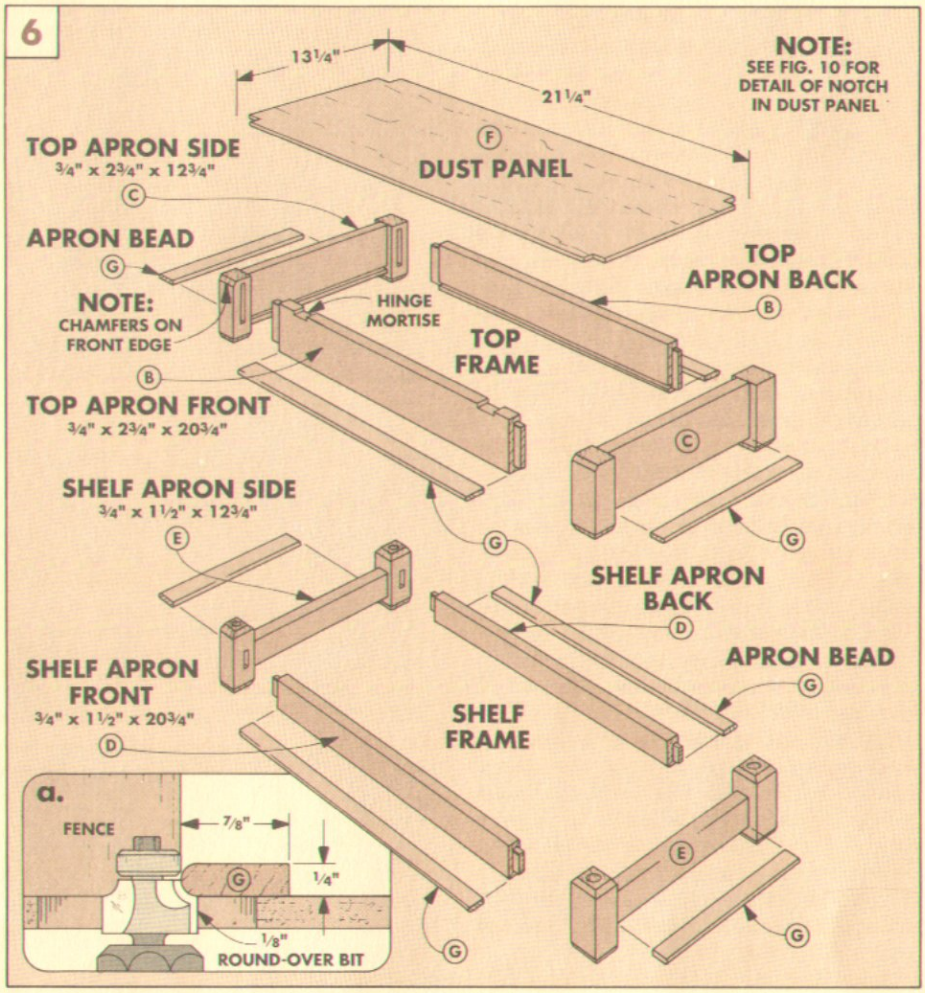

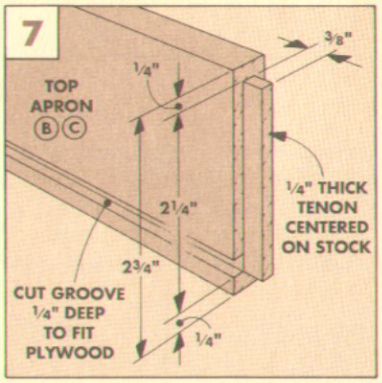

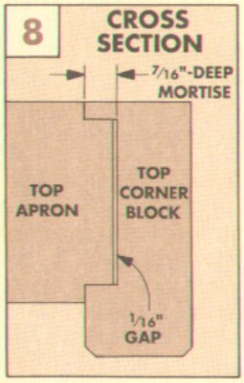

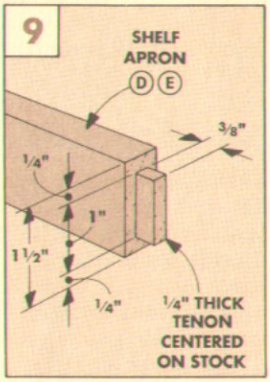

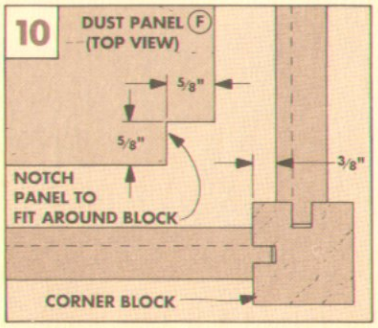

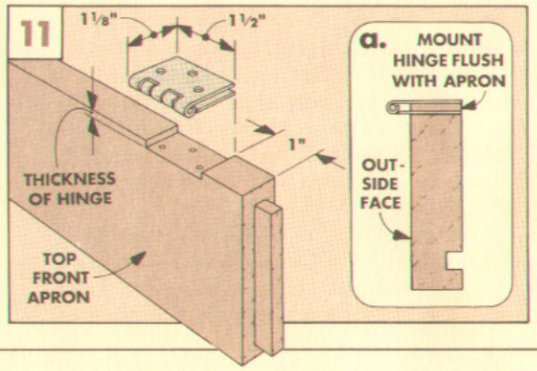

SHELF

When the shelf frame is completed, you can start work on the **shelf (H)**. It's made like a breadboard — a panel with ends caps. I chose this design because it allows the shelf to expand and contract with changes in humidity without damaging the stand.

Most wood movement occurs *across the grain*. Take a look at Fig. 12. The shelf panel can expand and contract — it's not limited by the corner blocks. The end caps fill in the space between the corner blocks. And since wood expands very little *along the grain*, the end caps can safely abut the corner blocks.

SHELF BLANK. Start by cutting a shelf blank to finished width (from the front of the front apron to the back of the back apron, plus ½") and length (from corner block to corner block, plus ¾" for two tongues), see Fig. 12. Now, cut a tongue on each end of the shelf, see Fig. 12a. Then, to allow the shelf to fit between the corner blocks, trim 1⅝" off each end of the tongues, see Fig. 13.

END CAPS. The next step is to make the **end caps (I)** to fit between the corner blocks, see Fig. 12. Each end cap has a groove centered on one edge to accept a tongue. Glue the end caps to the shelf with a couple of dots of glue in the center only.

EDGE PROFILE. Next, rout a round-over with a shoulder on the edges of the shelf and end caps, see Figs. 14 and 14a.

ATTACHING THE SHELF. The last step is to attach the shelf to the frame, see Fig. 15. I used table top fasteners screwed in shallow mortises drilled in the aprons, see Fig. 15a.

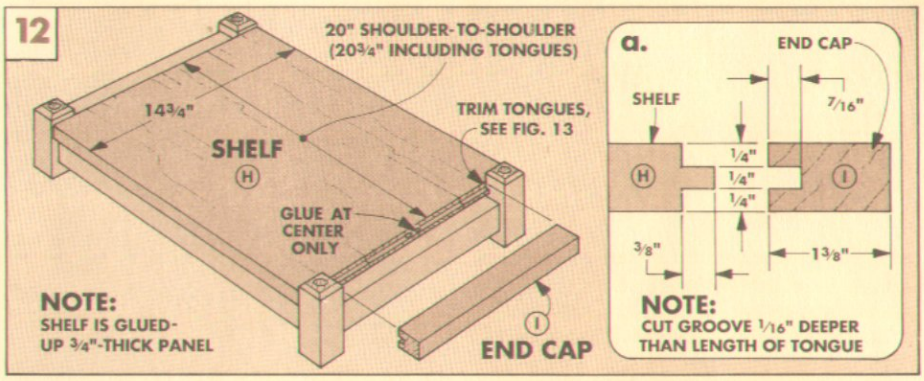

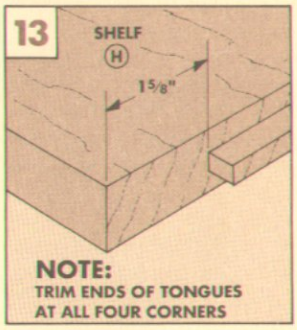

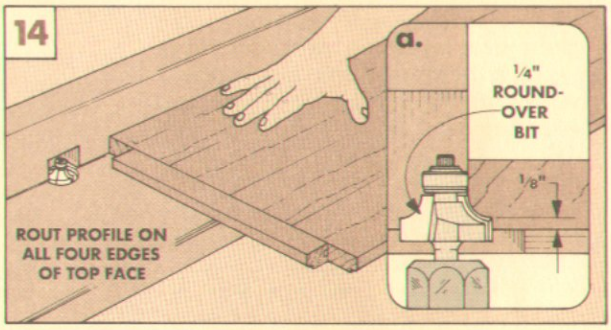

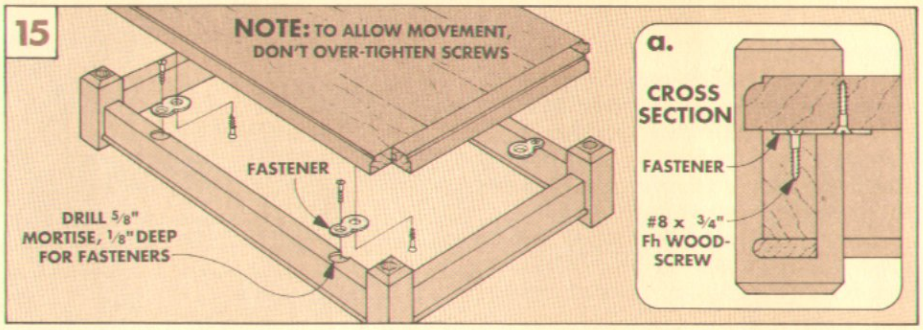

LEGS & ASSEMBLY

After completing the shelf and the top frame, the next step is to make the **upper legs (J)** and the **lower legs (K)**. I turned the legs, tapering the lower legs, refer to the Leg Diagram on page 7. (Note: An alternate leg design that does not require turning is shown on page 12.)

The upper legs have a tenon turned on each end. The lower legs have a tenon turned on the *top* end only. These tenons are sized to fit in the holes in the corner blocks.

ASSEMBLY. After turning the legs, you can assemble the top frame, shelf, and legs, see Fig. 16. I thought this was going to be tricky. But since the tenons fit snugly in the corner block holes, the parts were easy to glue up without clamps.

I found it easiest to assemble the pieces upside down on a flat surface. To begin, apply glue to the tenons on both ends of the upper legs, and insert them into the corner blocks in the top frame, see Fig. 16. Then put the shelf on the legs. Now, use a framing square to check that everything is square.

Finally, glue the lower legs to the shelf frame. To help align the legs, I made a plywood template with holes drilled in it to accept the legs, see Fig. 17. It holds the legs in the correct position in relation to each other, and makes it easy to see and correct any racking or twist in the legs.

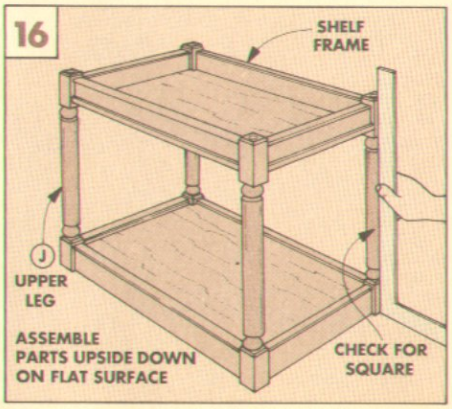

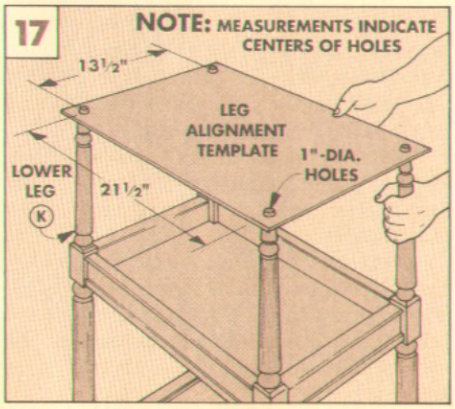

TOP

The last part of the Book Stand to build is the **top (L)**.

To start, glue-up a panel and cut it to finished size (16" by 24"), see Fig. 18.

EDGE PROFILE. Next, rout a profile along all four edges. I used the same set-up on the router table as when routing the edge profile on the shelf, refer to Fig. 14a.

BOOK REST. After the profile is complete, you can screw a 1¼" strip as a **book rest (N)** to the top near the front edge, see Fig. 18.

CLEATS. To flatten the top, and to keep it flat over time, I screwed two **cleats (M)** to the underside of the top, see Fig. 19.

Screw (don't glue) the cleats to the top through counterbored oversized shank holes. The oversized shank holes allow the top to expand and contract with changes in humidity. (If the cleats were glued on, the top might eventually split.)

RATCHET SYSTEM. The angle of the top is changed by adjusting a simple two-part ratchet system. The **prop (O)** is hinged to the underside of the top, see Fig. 19. The **ratchet (P)** is installed inside the top frame, see Fig. 20.

To start, cut the prop to size and cut a 45° bevel at one end. Then screw one leaf of the hinge to the prop at the square end, see Fig. 19. The other leaf of the hinge is screwed to the bottom face of the top. Locate the barrel of the hinge 9⅝" from the back edge, and center it on the length of the top.

To make the ratchet, cut the stock to length for a close fit between the front and back aprons, see Fig. 20. To cut the teeth, I used a ¾"-wide dado blade tipped at a 15° angle in the table saw, see Fig. 20a.

After cutting the teeth, glue the ratchet to the dust panel in the top frame, centered on the length of the frame, see Fig. 20.

ATTACHING THE TOP. The last step is to hinge the top to the front apron of the top frame, see Fig. 21. To do this, first screw the hinges into the mortises in the apron. Then turn the top and the stand upside down, and position the stand on the top evenly centered between the front, back, and sides.

Now mark the position of the hinges on the bottom face of the top. This is easier than you might expect since the hinges stick out ⅜" in front of the apron, see Fig. 21. Mark around the sides and barrel of the hinge.

Next, remove the stand and take the hinges off the apron. Now align the hinges with your marks on the top and drill the screw holes, see Fig. 21a. Finally, screw the top to the stand, see Fig. 22.

The angle of the top is easily adjusted, see Fig. 22. Note: The stand also makes an attractive flat top table, see photo on page 32.

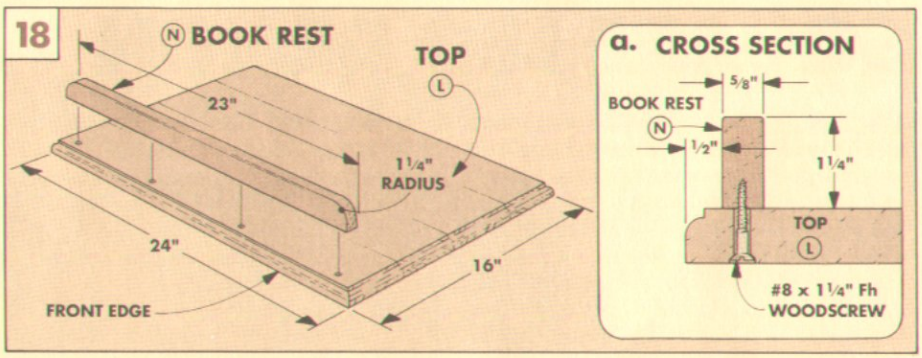

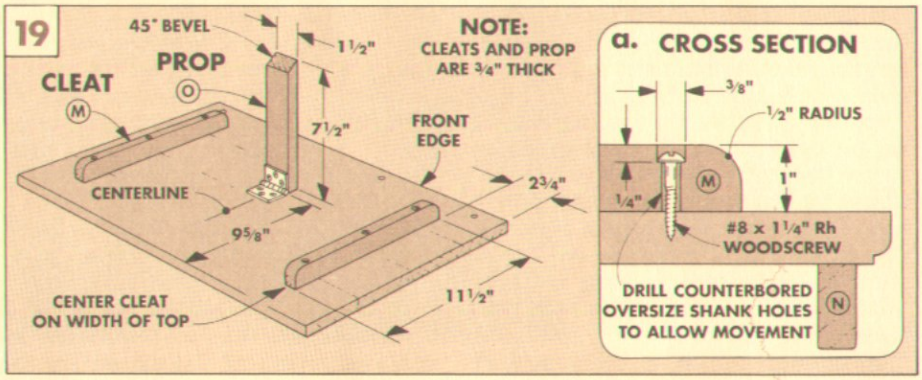

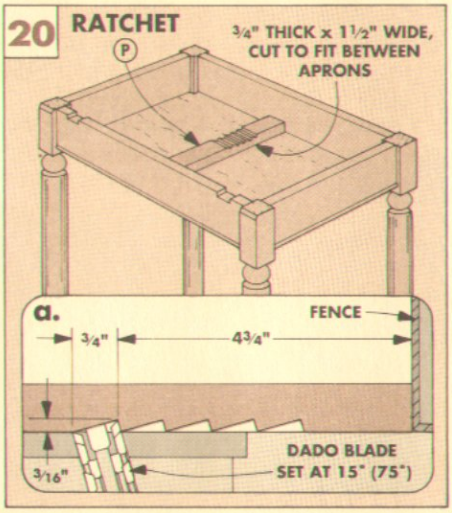

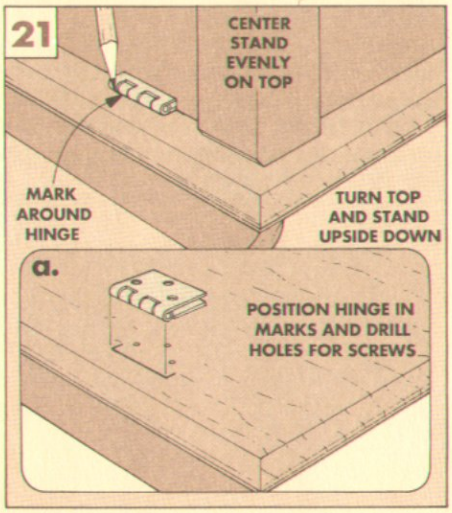

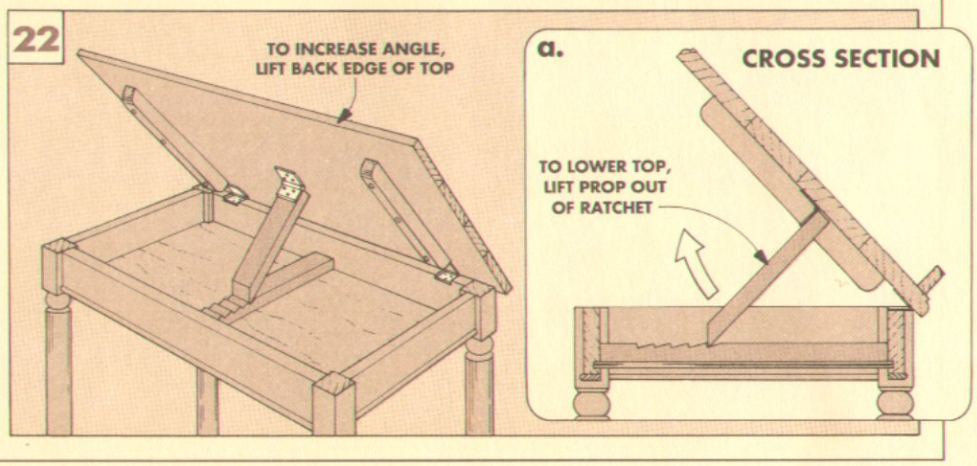

BOOK STAND

SQUARE LEG DESIGN

After finishing the Book Stand with round legs, I decided to build a second one with square legs (that wouldn't require turning on the lathe). Even though I only changed one feature — the legs — it changed the whole look of the Book Stand.

JOINERY. I also had to re-design the method used to join the pieces of the leg. The round legs had tenons turned on the ends that fit into holes in the corner blocks. But without a lathe that's not possible on the square leg. So I simply created round tenons by gluing dowels into holes drilled in the ends of the legs, refer to Fig. 5.

MAKING THE LEGS. The first step in building the legs is to cut eight blanks of 1½"-square stock to finished length, see Fig. 1.

After the blanks are cut to length, drill the holes in the ends of the legs to accept ¾" dowels, see Fig. 1. To do this on the drill press, see Shop Notes on page 17. (Note: There's no hole in the bottom end of the lower legs.)

Shop Note: You need a good fit between the dowel and the hole, but the diameter of commercially available dowels is rarely exact. If you can't find dowels *exactly* ¾" in diameter, it's better to buy them a little oversize and sand them down to fit in the holes.

CHAMFER THE ENDS. The next step is to chamfer *both* ends of the upper legs, but only the *top* end of the lower legs, see Fig. 1.

TAPER LOWER LEGS. To give the Book Stand a more delicate appearance, I decided to taper the lower legs, and create a decorative "foot" at the very bottom, see Fig. 1.

First, I cut the taper using a tapering jig on the table saw. Set the jig to begin the taper at the top end of the lower legs.

FEET. To create the look of a foot on each leg, I used the table saw again to cut a V-groove 2" from the bottom end, see Fig. 2. To set up this cut, tilt the blade to 45°, and set it to cut 3/32" deep. I used the rip fence as a stop, setting it 2" from the blade, see Fig. 2a.

You can't use the miter gauge set at 90° when cutting the grooves — the ends of the grooves on the adjoining faces won't align. Instead, tilt the miter gauge so the bottom of the leg is flat against the rip fence, see Fig. 2. This is an angle of about 1½°. Now the V-grooves can be cut in the lower legs.

ROUND OVER THE EDGES. After the V-grooves are cut, the upper and lower legs can be softened by rounding over the edges with a ¼" round-over bit mounted in the router table, see Fig. 3.

Once the legs are rounded, the corners of the V-grooves need some work to look just right, see Fig. 4. I used a chisel to cut the chamfers evenly around the corners.

CUT DOWELS AND ASSEMBLE. The final step is to cut a ¾"-dia. dowel into 1⅞" lengths, see Fig. 5. (They're cut a little shorter than the combined depth of the holes so the pieces will come together tight.)

Now the legs are ready to assemble to the other parts of the stand, refer to Figs. 16 and 17 on page 10.

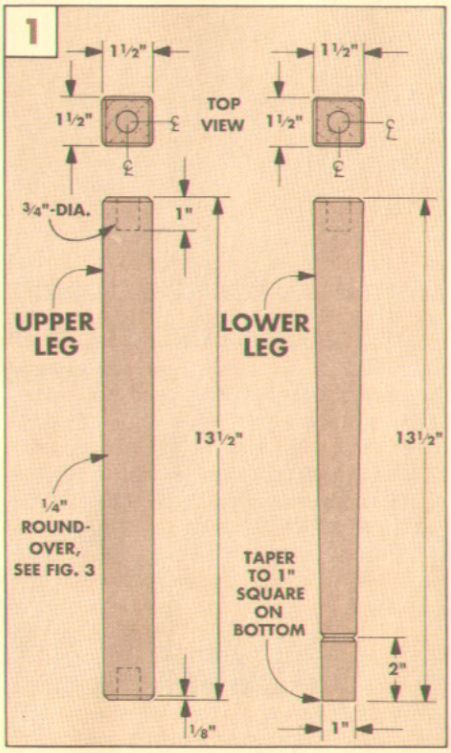

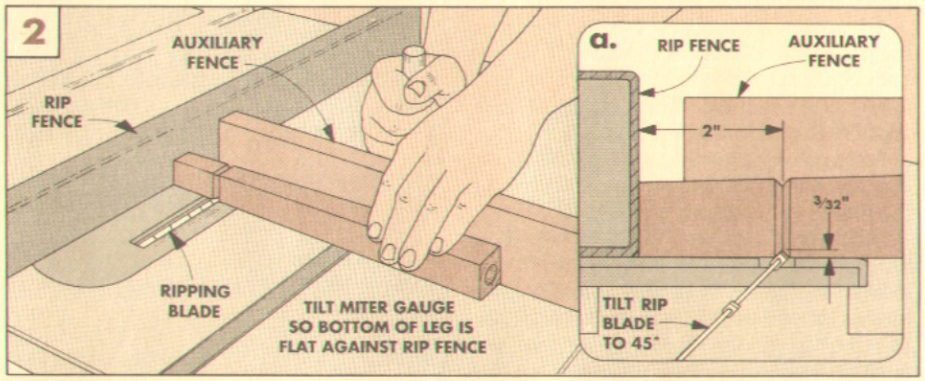

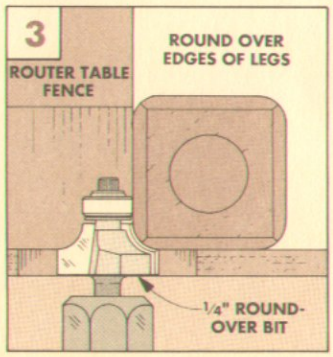

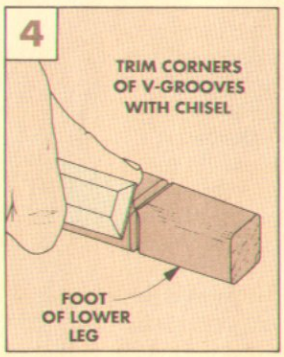

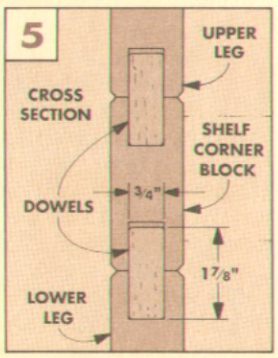

Micro-Adjustable Fence

A band saw is a great tool for freehand cutting. But sometimes it can be a real challenge using a band saw for cutting a straight line, such as ripping or resawing. To make cutting straight lines on my band saw easier and more accurate, I built a special fence. (It even works on a drill press table.)

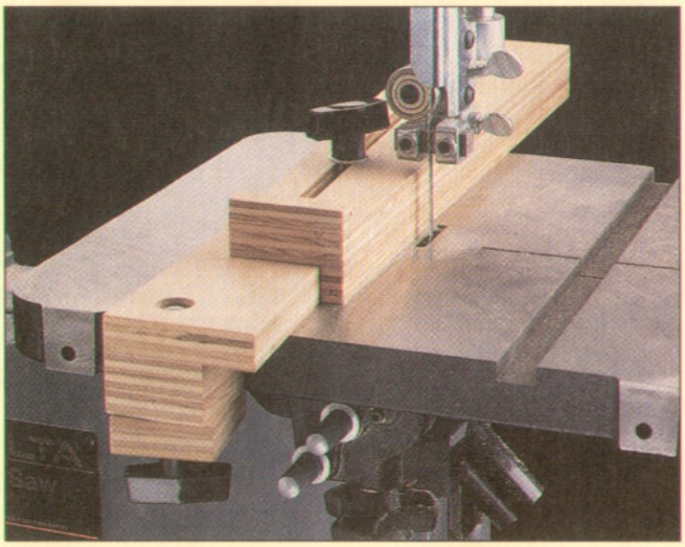

The fence has two unique features. First, it's micro-adjustable — the fence can be moved toward or away from the blade in very small increments.

Second, the fence has a simple built-in clamping system that will work on just about any band saw table. It doesn't require extra clamps or special hardware. (Complete instructions for building this micro-adjustable fence are on the next two pages.)

SLIDING PIECES. The fence has two main parts: a base with an angled edge, and an adjustable top with an angled guide strip on the front edge. The adjoining edges of the base and guide strip are cut at a slight angle (3½°) and slide against each other. When the top is in position, it can be tightened down with a twist of a knob.

The angle on the base and guide strip translates into a ratio of 16 to 1. So for every 1" the top slides along the base, the fence moves 1/16" closer to or farther from the blade. That's what makes it so easy to move the fence in small increments. (For more on "How It Works," see the box below.)

DRIFT. But what if your band saw blade doesn't cut in a straight line? It might lead or drift a little to one side or the other. Then you want to mount the fence parallel to the line of drift rather than parallel to the side of the blade. (See Shop Notes, page 16.)

With this in mind, I built this fence so it can be positioned on the band saw table to compensate for as much as 6° of drift. That's about 2" off square from one side of a 14" band saw table to the other. And you can easily modify the fence to compensate for greater drift. But instead, I'd try to find the cause of the excessive drift and correct it.

For tips on using the fence, see page 15.

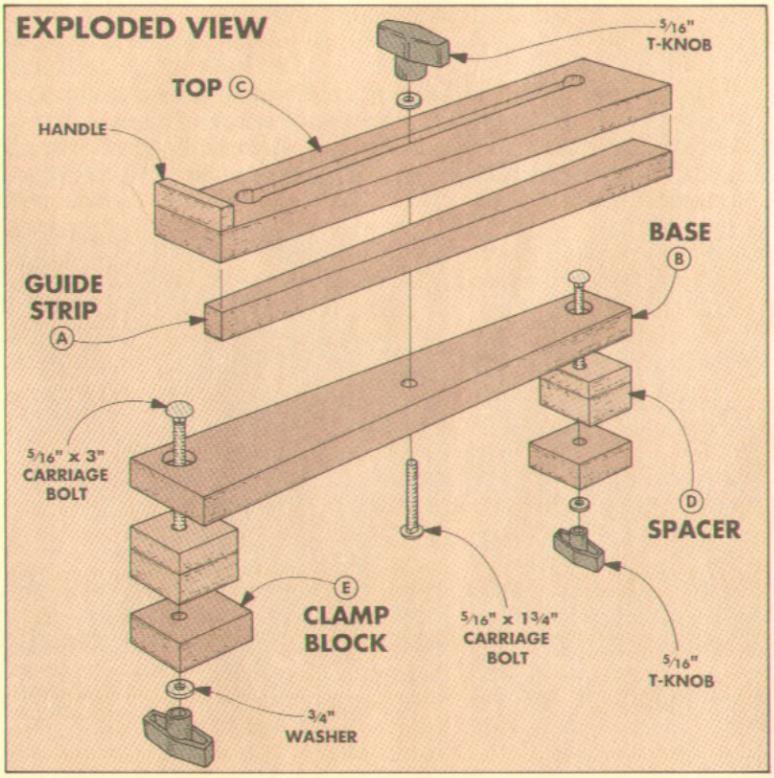

HOW IT WORKS

The two main parts of the fence (the base, and the top with its guide strip) have angled edges that slide against each other. As the top slides along the base, it's similar to driving a wedge against the base . . . it moves the top away from (or closer to) the base.

The angle is the key to controlling the amount of movement. The 3½° angle produces a 16 to 1 ratio. By moving the top 1", you increase or decrease the distance between the fence and the blade by only 1/16".

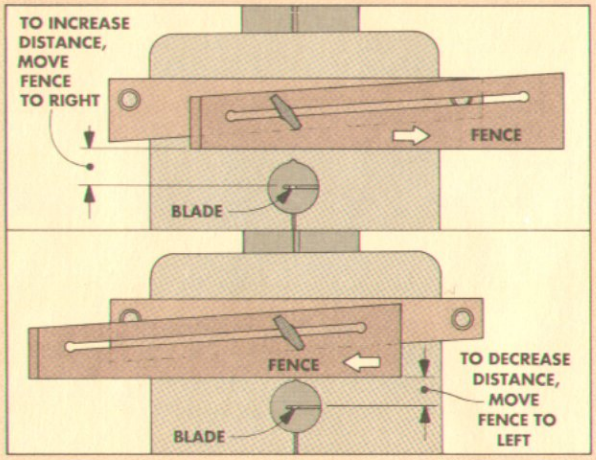

CUTTING THE PIECES

I began building the band saw fence by cutting the three tapered pieces: the guide strip (A), base (B), and top (C), see Cutting Diagram at right. All the pieces are cut from a ¾"-thick plywood blank that's 24" wide. It's wider than needed to provide extra support when cutting. (Note grain direction.)

The length of the blank is determined by adding 4⅛" to the maximum depth (front to back) of your band saw table. This extra length allows the fence to overhang the table on each end for clamp blocks, refer to Fig. 9a. The table on my Delta band saw is one of the more common sizes: 14¼" deep. So I cut my blank 18⅜" long.

AUXILIARY FENCE. To support the whole width of the plywood blank while cutting the tapered pieces, I screwed a 24"-long auxiliary fence to my miter gauge, see Fig. 1.

GUIDE STRIP. Now you're ready to cut the pieces. This is done in a series of steps starting with the **guide strip (A)**, see Fig. 1. First set the miter gauge to cut a 3½° angle (86½°). Now start the first cut ½" from the corner of the blank. The narrow cut-off piece is the guide strip.

BASE. But this cut does something else. It creates the angled side of the second piece, the base (B). To cut off the **base (B)**, you could change the miter gauge setting to 90° and cut this piece off the end of the blank. But the third piece (the top, see Fig. 3) also needs to be cut at exactly 3½°. And I didn't want to have to re-establish that angle on the miter gauge. So I used the rip fence to cut the base (B), see Fig. 2.

To do this, first rotate the blank so the upper left corner (marked with an "X" in the drawings) becomes the lower right corner, see Fig. 2. Then, set the fence to cut off the correct size piece, and rip the base off the side of the blank.

CUTTING DIAGRAM

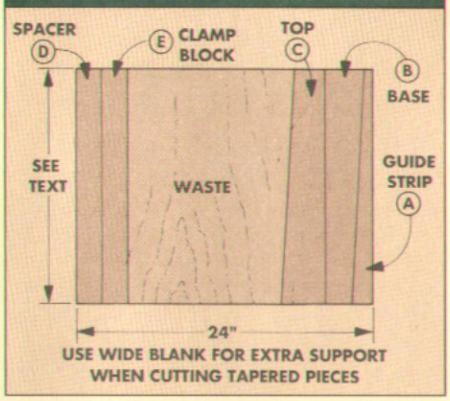

TOP. The last tapered piece to cut is the **top (C)**. Since the blank has parallel sides again, switch back to the miter gauge and make an angled cut, see Fig. 3.

Save the remainder of the blank to cut the spacers and clamp blocks used later.

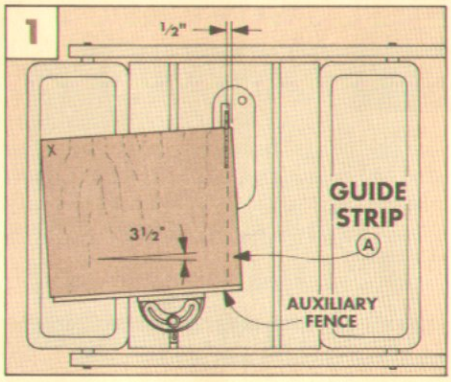

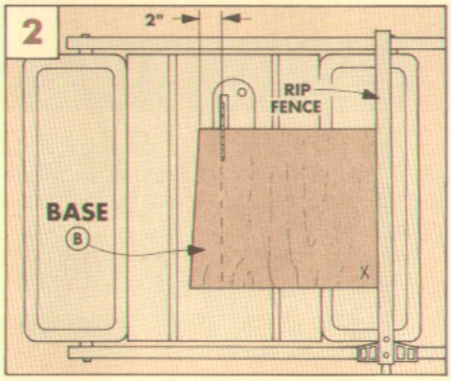

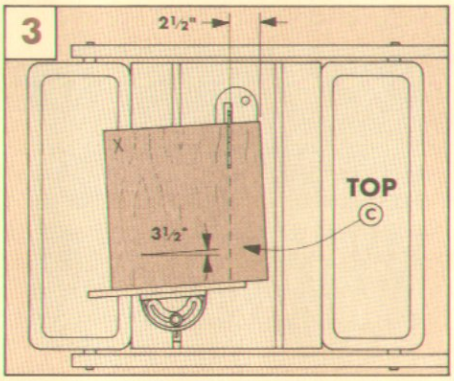

TOP

Once the pieces are cut to size, the next step is to cut a ⅜"-wide slot in the top (C) for the bolt that locks the top on the base. This slot is cut parallel to the *angled* edge, see Fig. 4.

DRILL END HOLES. To cut the slot, I started by drilling ½"-diameter start and stop holes at both ends, see Fig. 4.

ROUT SLOT. Next, to cut a slot between the holes, I used a ⅜" straight bit mounted in the router table, see Fig. 5. To align the router table fence, drop one hole over the bit (with the router turned off) and center the bit in the hole. Then pull the fence up against the workpiece and lock the fence in place.

I routed the slot in three progressively deeper passes. First, set the height of the bit to cut about one third the thickness of the top. Then position the top so the bit is centered in the left-hand hole. Turn on the router and rout the slots, see Fig. 5.

GLUE UP. After the slot is cut, glue the guide strip (A) to the bottom side of the top piece (C), see Fig. 6. Align the pieces so their straight edges (not tapered edges) are flush.

Shop Note: To keep the pieces aligned while gluing, apply only a thin layer of glue. Then, rub the glued surfaces together until the pieces feel like they're sticking together. Then clamp until the glue dries.

HANDLE. To make the fence a little easier to adjust, I cut and glued a ½"-wide strip of ¾"-thick plywood to one end of the top as a handle, see Fig. 6.

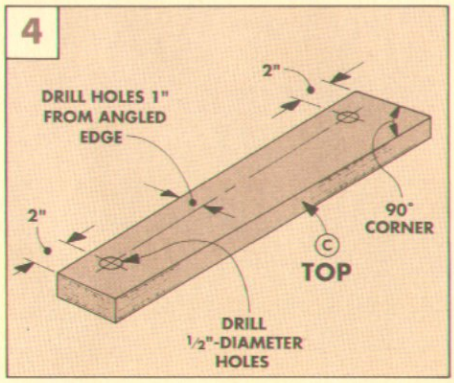

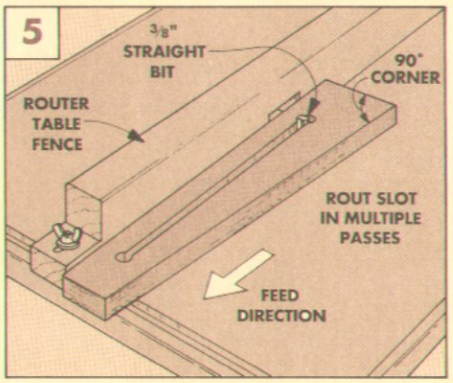

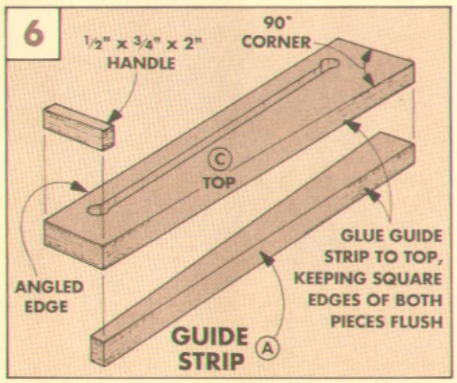

BASE

After the top is completed, you can build the base (B). The tapered piece is already cut. But you need to rip two 2"-wide strips off the plywood blank — one to build up a couple of spacers and one for a couple of clamp blocks, see Cutting Diagram on opposite page.

SPACERS. To make the **spacers (D)**, first cut one of the strips in half and glue the pieces together. This makes a blank 1½"-thick (and longer than needed), see Fig. 7.

The thickness of the spacers should equal the thickness of the band saw table minus 1/16" (1 3/16" in my case). So resaw the blank to finished thickness, see Fig. 7a. Then cut the spacers to length (2"), see Fig. 8.

Next, glue the spacers to the bottom of the base along the "square" edge, see Fig. 9.

BORE HOLES. After the glue dries, the next step is to bore three holes in the base to accept 5/16" carriage bolts.

Begin by drilling a 1"-diameter counterbore near the ends of the base to accept the head of the carriage bolts, see Fig. 9. Then bore the 5/16" shank holes, see Fig. 9a.

The third hole is centered on the length of the base, and holds a carriage bolt that locks the base to the top. To help locate the hole, I used the slot in the top, see Fig. 10.

Note: I offset the hole so the bolt rubs along one side of the slot, see Fig. 10a. This way the top still moves easily, but it's held tightly against the base.

After drilling the 5/16" hole, drill a 1" diameter counterbore on the bottom of the base, see Fig. 10a.

CLAMP BLOCKS. Next, cut two 2½"-long **clamp blocks (E)** from the remaining plywood strip, see Fig. 9. Then bore a 5/16" hole in each for the carriage bolt.

ASSEMBLY. Finally, assemble the fence using the carriage bolts, washers and T-knobs (or wing nuts). Note: For sources of hardware for this fence, see page 31.

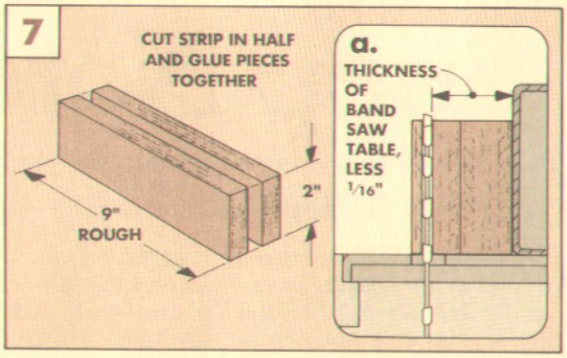

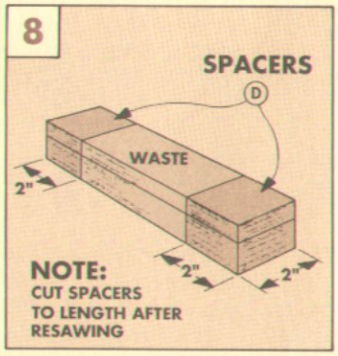

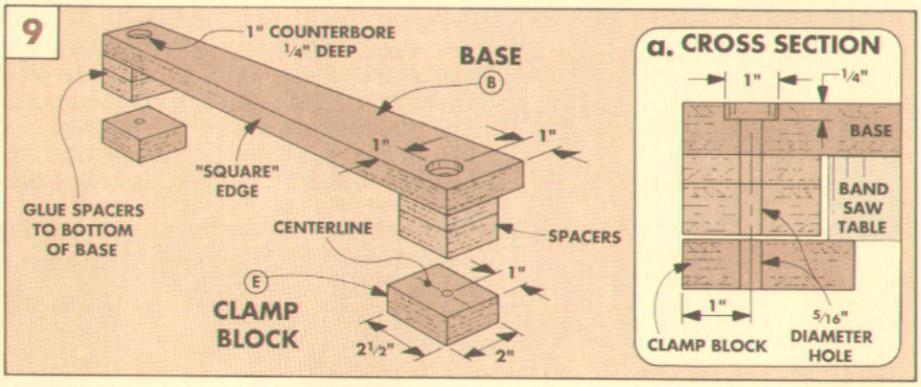

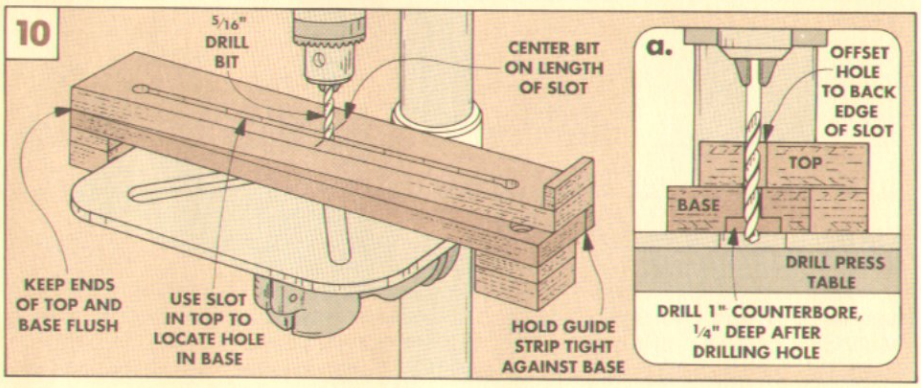

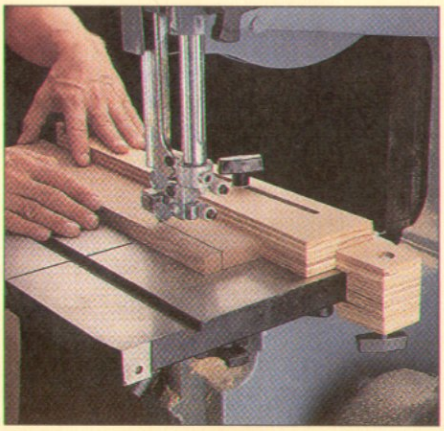

● *To use the fence for ripping, clamp it to the band saw table at approximately the desired distance from the blade. Then slide fence forward or back to set exact distance.*

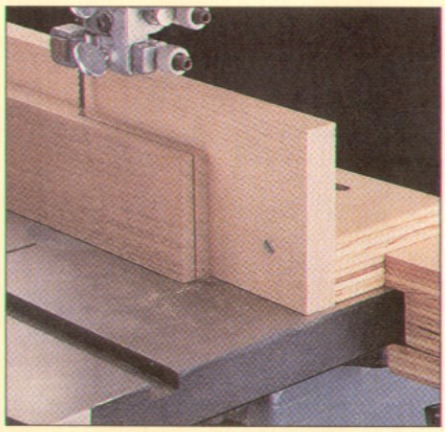

● *For resawing, first screw a high auxiliary fence to the front edge of the adjustable fence. (Make sure it's 90° to the table.) Then adjust the fence as you would for ripping.*

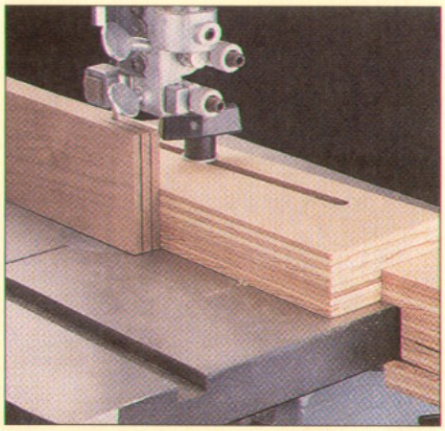

● *To cut tenons, first position the fence to cut the tenon a little thick. Cut both sides and check the fit. Sneak up on the exact setting by adjusting fence between test cuts.*

Shop Notes

TEMPLATE FOR TURNING SPINDLES

■ When turning a spindle on the lathe to match a pattern, all you really need is a ruler and caliper.

But, if you're making multiple spindles, like the four legs for the Book Stand on page 6, it's simpler and more accurate to first transfer the pattern to a full-size template. Then turn each leg following the template, and they will all be identical.

TEMPLATE. The template I use is a piece of 4"-wide poster board cut the same length as the finished leg, see Fig. 1. What makes this template a little different is that there are marks along both edges.

Along one edge of the template is a line of "tick" marks that serve as a ruler for laying out the pattern. The other edge of the guide has a series of cut-out notches used like a caliper.

PATTERN SIDE. The pattern side of the template shows where the different contours of the leg pattern are to be positioned along the length of the workpiece. By holding this side of the template against the spinning blank, the position of each contour can be marked with a pencil, see Fig. 2.

CALIPER SIDE. As the spindle is being turned, the other edge of the template works as an indicator gauge. It shows when you've reached the correct outside diameter of beads, tenons, and tapers, and the correct inside diameter of coves, fillets, and V-grooves, see Fig. 3.

A template like this helps ensure all spindles turned from the same pattern look identical. Because they're all made using the same template.

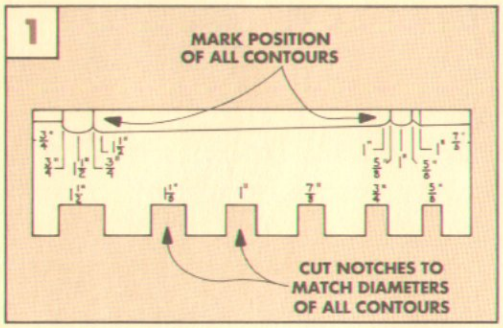

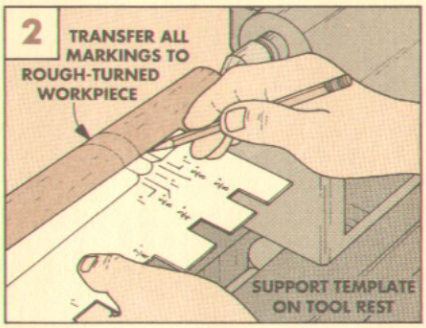

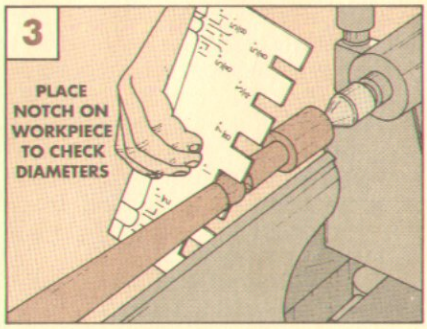

BAND SAW "DRIFT"

■ Sometimes the blade on a band saw will "drift" when you resaw a board into thinner pieces. This can happen if you're using a fence on the table, or not.

MEASURING DRIFT. To determine if your blade is drifting, try resawing a piece of scrap wood. First draw a pencil line along the top edge of the scrap piece to give yourself a cut line to follow with the blade, see Fig. 1.

Now, as you feed the piece through the blade, swing the end of the workpiece in one direction or the other to keep the blade cutting along the pencil line, see Fig. 1.

Note: If your blade is cutting perfectly, you won't have to swing the end of the piece at all.

ELIMINATING DRIFT. If the blade is drifting in one direction, you'll notice that you will be pushing the workpiece across the table at a fairly consistent angle. Once the cut follows the pencil line for a couple inches, turn off the saw and hold the workpiece at the new angle. This is the "drift angle" of the blade.

Now draw a pencil line on the table along the inside edge of the workpiece, see Fig. 2. Then pull the workpiece off the blade and clamp a fence down on the line. (In Fig. 3, we're showing the micro-adjustable fence from page 13 with a tall auxiliary fence attached to it.)

Next, try cutting another piece of scrap along the fence. Even though the fence is at an angle, the blade should cut straight along the line. The important thing here is to find the correct angle, clamp down the fence, and stay with it.

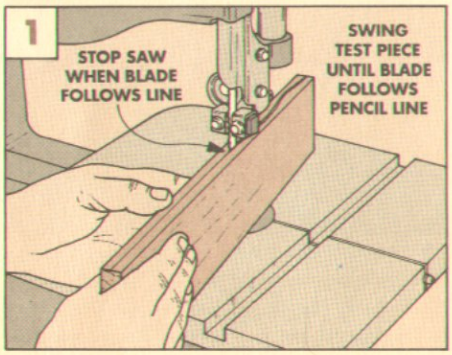

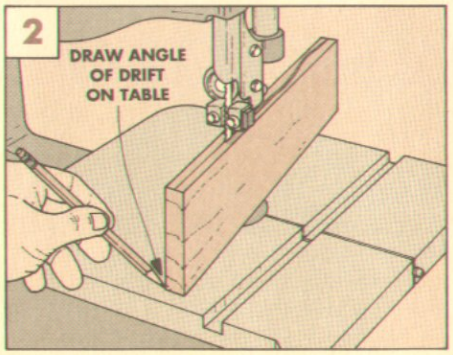

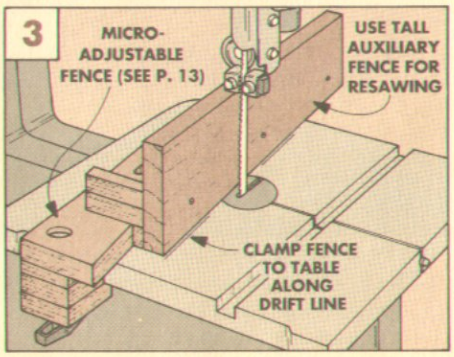

BENCH-TOP TIP

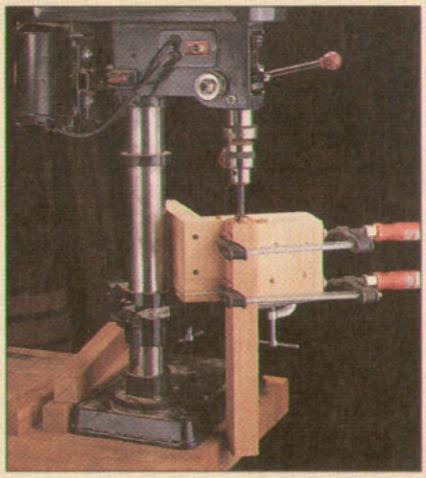

To use the holding jig on a bench-top drill press, first swivel the head over the edge of the bench. Then set up as described at left.

DRILLING INTO THE END OF LONG STOCK

■ Without a horizontal boring machine, it's difficult to drill a straight hole into the end of a long workpiece. That's the problem I faced while working on the legs of the Book Stand shown on page 6.

HOLDING JIG. So I made a jig for the drill press table. The jig holds the leg off one side of the table so it's straight up and down under the bit, see Fig. 3.

HOW IT'S MADE. The jig consists of a block that's attached to the front of a fence and base, see Fig. 1. The block and fence are made from a length of 2x6.

First rip each piece to width to produce flat, square edges. Then, glue and screw the fence to the top of a square plywood base, see Fig. 1.

Next, cut a brace from a 2x6 and glue it to one end of the fence and base, see Fig. 1. This holds the fence perfectly vertical as the hole is being bored.

Now, to create a corner "pocket" where the workpiece is clamped, glue and screw the block to the fence, see Fig. 1a.

SETTING UP. Before using the jig, check that the drill press table is *perfectly* perpendicular to the drill bit. To do this, swing the table from under the chuck and place the jig on the table.

Now adjust the table so your longest drill bit aligns vertically with both the fence and the block, see Fig. 2.

Next, replace the drill bit with a Forstner (or whatever bit you'll be using), and clamp the workpiece in the pocket, see Fig. 3.

Finally, position the jig on the table so the centerpoint on the bit aligns with the center of the workpiece.

DRILL HOLES. After the bit is aligned, clamp the jig to the table and drill the hole. Note: To drill holes the same depth in other workpieces, set the depth stop on the drill press and align each workpiece with the top of the jig.

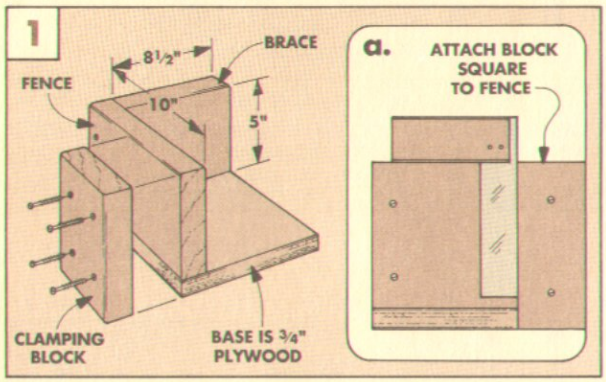

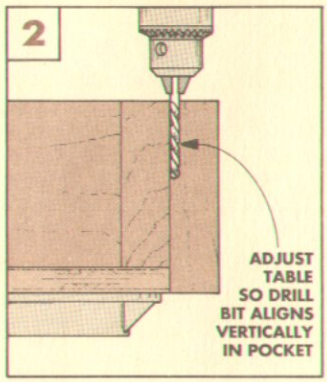

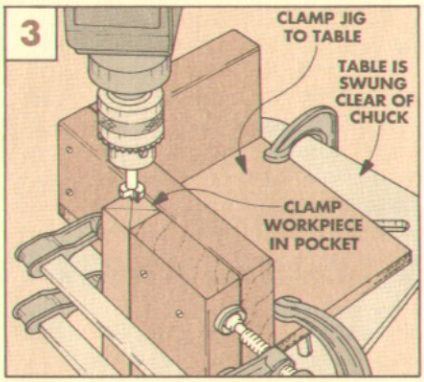

ENLARGING A ROUND TENON

■ When turning a round tenon on the lathe, it's easy to turn the tenon a little too small. But then the tenon won't be a perfect fit in the mortise (hole).

WRAP WITH A SHAVING. So how do you make a round tenon larger after you've turned it too small?

First, plane a thin shaving from a piece of scrap. Then spread some glue on the tenon and wrap the curled shaving around it, see drawing.

When the tenon is glued in the mortise, the shaving becomes part of the joint.

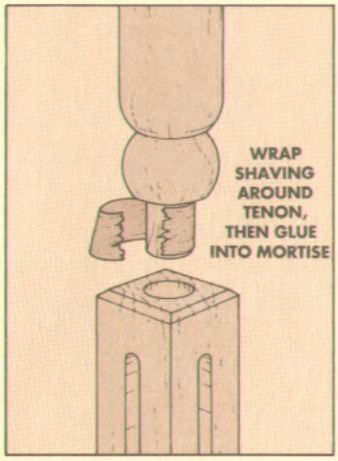

CHECKING FOR SQUARE

■ Because of the way they're built, the frames on the Book Stand on page 6 can't be checked for square in the usual way. The problem is, the corner blocks get in the way of a try square.

To get around this problem, I first set up the miter gauge on my table saw to cut a perfect 90°. Then cut a small piece of plywood to act as a substitute for a try square.

Then you have to trim off one corner at an angle. Now, the plywood will easily clear the block in the frame as you check the corner for square.

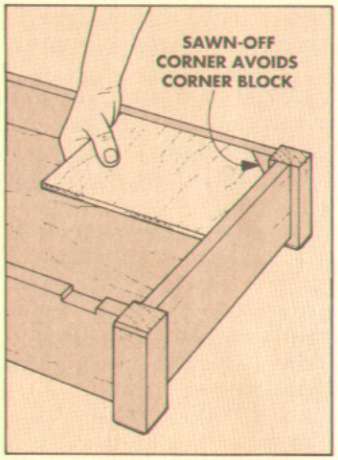

Cutting Plywood

We received quite a few entries for the Cutting Plywood Contest that was announced in *Woodsmith* No. 78. And surprisingly, one-third of them were similar to the circular saw guide submitted by **John Nehring** of Gravette, Arkansas. But, John's had one small improvement over the others.

The nice thing about circular saw guides like this is they're quick to set up. You simply align the edge of the guide with your layout line, see Fig. 1.

But the reason we liked John's was the clamping wing on the left-hand side of the fence. This wing ensures that the clamps used to hold the guide in place are far enough out of the way so the circular saw's motor housing won't bump into them.

MAKE TWO. The guide has two parts: a base and a fence. Both pieces are cut to the same length from ½" plywood, see Fig. 1.

If you're going to build this circular saw guide, I recommend building two — one for cutting *across* a sheet of plywood (48" long), the other for cutting the *length* of a sheet of plywood (96" long).

CUT THE PIECES. Rip the piece for the base to a width of 12". (This piece will be trimmed narrower later.)

To determine the width of the fence, measure the distance between your saw's base plate and the motor housing, see Fig. 2.

ASSEMBLY. Now, glue and screw the fence to the base. But be sure to leave 1½" of the base sticking out on the left-hand side as a wing for the clamps, see Figs. 1 and 2.

CUT TO FIT YOUR SAW. Now the saw guide has to be customized to fit *your* circular saw. To do this, trim off the right-hand side of the base using the saw and blade you'll use when cutting plywood, see Fig. 2. Note: This will customize the saw guide for that particular saw and blade.

If you intend to use a blade that cuts a kerf of a different width, then you'll have to build another cutting guide for it.

USING THE SAW GUIDE. To use the saw guide, first measure and mark the sheet of plywood at both edges. Next, align the right-hand edge of the base to the pencil marks and clamp the guide in place. Place the saw's base plate against the fence and cut across the sheet of plywood, see Fig. 1.

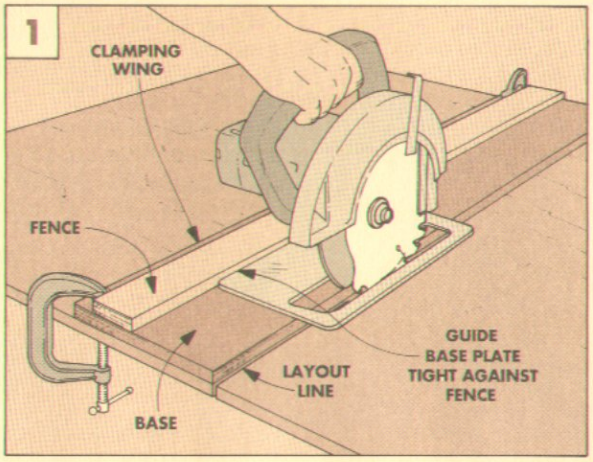

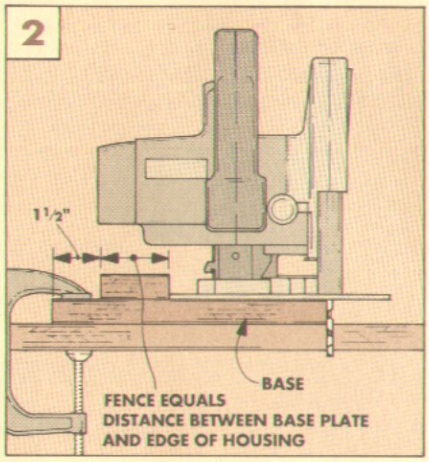

T-SQUARE ROUTER GUIDE

■ When you think of cross-cutting plywood, you usually don't think of using a router. But, a straight bit in the router can produce a crisp, clean edge. The entry we received from **Ronald Graham** of Salem, Oregon helps you do just that. Ron's T-square router guide is also great for cutting dadoes.

BUILDING THE GUIDE. The router guide is built from two pieces of 1x4 stock, see Fig. 1. (Cut a head 30" long and a fence 54" long.)

Once the two pieces are cut to size, drill and screw them together to form a "T." Shop Note: Use a square to position the two boards, and don't glue them together — you may have to adjust for square later on.

ALIGNMENT NOTCH. The thing that makes set-up quick is a notch routed into the head that allows you to quickly position the T-square.

To rout the notch, first clamp the T-square to a piece of scrap plywood. Then, rout across the plywood and continue into the head to cut the notch. Note: Use the same straight bit you plan to cut plywood with.

USING THE GUIDE. To use the guide, first mark a layout line on the plywood. Then, position the notch on the line, see Fig. 1a. Now clamp the fence at the other side of the plywood, making sure the head is tight against the edge of the plywood.

To rout across the plywood, hold the router's base plate against the fence. Start from the side opposite the head and release the router's power switch just as the bit enters the notch.

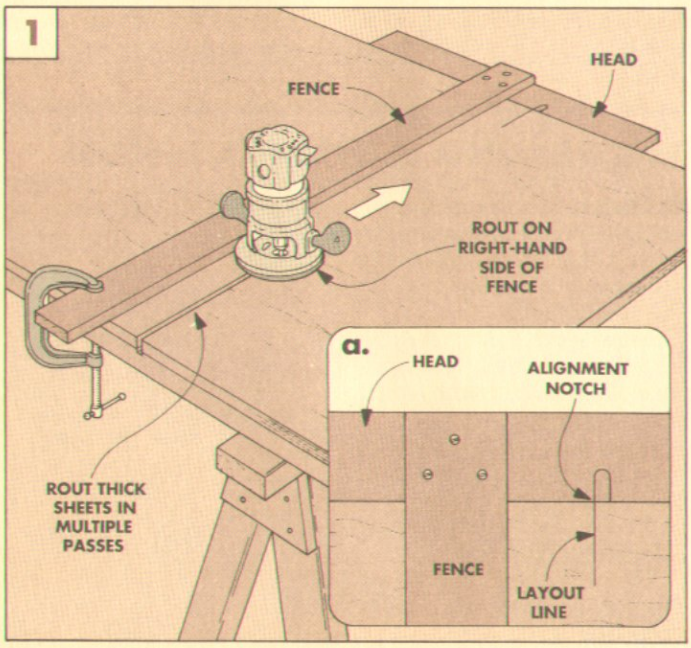

A-FRAME SUPPORT

■ Our favorite entry is this A-Frame Plywood Support submitted by **Robert Calvert** of San Jose, California. The nice thing about this entry is it allows you to cut a full sheet of plywood while you're standing up. Also, it can be set up and broken down by one person in just a few minutes.

If there is one drawback to this support, it's that you can't stand a full-size sheet of plywood on end if your shop has a low ceiling. But, because it's so portable, it can easily be moved to the driveway.

PARTS. To build the plywood support, you'll need six 2x4 studs and a length of ¾"-dia. dowel rod (16" long). You'll also need two 3½" carriage bolts with nuts and washers, and four 1" rubber bumpers.

UPRIGHTS. Begin by building the uprights — these are the two sections the plywood leans against, see photo and Fig. 1.

Each upright is constructed from two 2x4 legs bolted together at the top, see Fig. 2. First cut a 75° miter at the bottom end of each leg.

Then drill a ⅞"-dia. hole into the bottom for a dowel pin, see Fig. 3. (The hole is oversized so a ¾" dowel pin will easily fit in it.) These dowels hold the uprights to the base.

After the holes are drilled in the bottom of the uprights, cut a notch in the back legs to accept a stretcher, see Fig. 1.

Then, drill ⅜"-dia. holes through the tops for the bolts, see Fig. 2.

BASE RAILS. To build the base rails, first cut two 2x4's to length, see Fig. 1. Then, lay out and cut a notch in each for the base stretcher, see Fig. 1. Now, drill and glue the dowel pins in place.

To help prevent the rails from sliding on the floor, add two rubber bumpers to the bottom ends of each rail, see Fig. 3.

STRETCHERS. Lateral support for the A-frame is provided by a stretcher across the back legs, see Fig. 1. The distance between the base rails is maintained by a base stretcher. (The pieces lock together like Lincoln Logs.)

ASSEMBLY. Now the whole thing can be assembled. But there's one final step before the support can be used.

To allow a sheet of plywood to lie flat against the uprights, trim the "ears" off the back legs, see Fig. 2.

USING THE A-FRAME. To cut a sheet of plywood, lean it against the uprights with the bottom edge of the plywood resting on the base rails, see photo.

Note: You can crosscut and rip a sheet of plywood using this support. But always position the plywood so the waste side of the sheet is at the top and your saw is cutting parallel to the floor.

After the plywood is positioned, clamp the waste (top) side to the uprights, see photo. This does two things: it makes the support more rigid, and it prevents the waste from collapsing down on the saw blade as the cut is made.

Once the plywood is cut, unclamp and remove the waste. Then, lift away the good piece.

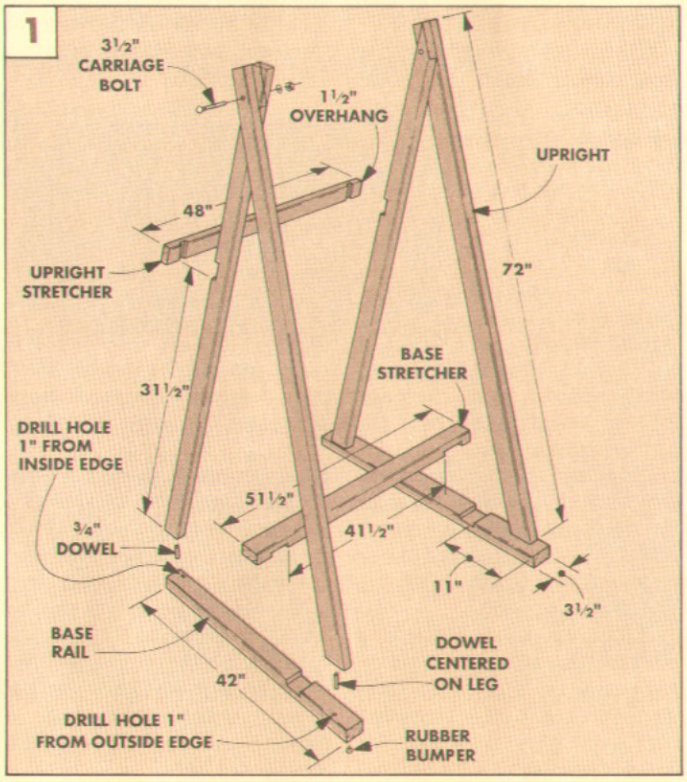

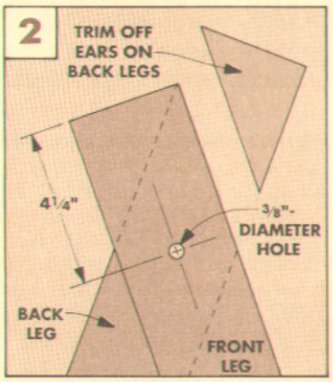

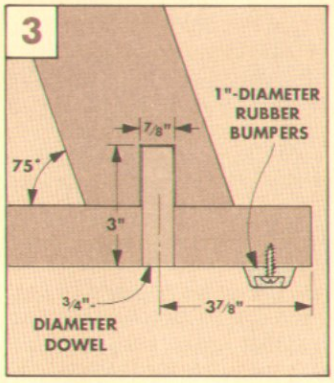

$100 CONTEST

DUST COLLECTION

Keeping the air clean in the shop should be a priority for every woodworker. And there are two ways you can go about it. One is to collect the dust and chips directly from the tool. The other is to filter the dust out of the air. If you have a good method for either or both, tell us about it.

We'll publish the best ideas we receive in an upcoming issue of *Woodsmith*. All winners will receive $100 and a *Woodsmith* Master Try Square. Duplicate or similar entries will be considered in the order received.

Send your ideas (photos help us a lot) and a daytime phone number to: Shop Tips Contest, *Woodsmith*, 2200 Grand Avenue, Des Moines, Iowa 50312. All entries must be postmarked no later than September 15, 1992.

Talking Shop

BLOTCHY STAIN

■ *I just finished building a project out of maple. To darken the wood, I used a stain on top of a stain controller. The finish turned out terribly blotchy. I thought stain controllers were supposed to eliminate blotches. What happened?*

Kris Hall
Las Cruces, NM

It's not unusual to end up with a blotchy finish after staining maple — even if you first used a stain controller. Stain controllers are only intended to minimize blotches, not eliminate them completely.

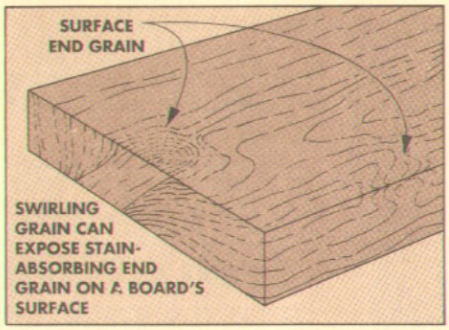

If you looked at a piece of maple through a microscope, you'd see end grain where you don't normally expect it — on the surface of the board.

HOW STAINS WORK. The pigments in stain don't soak into the wood fibers, they actually settle in the pores of the wood. When stain is wiped away, some of the pigments are trapped in the pores and left behind.

The deeper the pore, the more stain it holds. Some areas, such as end grain areas on the surface, hold more pigment. This causes blotches.

WOOD SELECTION. The best way I've found to minimize blotching is to be more selective in what boards I use.

When selecting wood, look on the edge of the board for a tight, even grain pattern throughout. Ideally, look for boards with straight grain — they'll take stain better.

Avoid boards with swirling patterns or grain that seems to take off in an odd direction — this is where surface end grain can show up the most.

Even with a stain controller, maple can turn out blotchy. The key to minimizing blotchiness is wood selection and sanding.

SANDING. After careful wood selection, another important step to prevent blotchiness is to sand the project thoroughly. Sand the entire surface with progressively smoother grits of sandpaper until you reach 120 grit. (If you're working with a porous wood, go up to 180 grit. The higher the grit, the more you'll seal up the pores.)

The final sanding (using the same grit sandpaper) must cover the *entire* project. If you don't, some areas will take the stain differently than others.

Once you're through with the final sanding, finish up with the next higher grit on any exposed end grain (areas such as the ends of shelves and door stiles.) This will fill in the pores of the end grain with finer particles of wood dust. Then when the stain is applied, it won't penetrate these areas as deeply.

STAIN CONTROLLER. As a final step, apply a stain controller such as Minwax Wood Conditioner or McCloskey's Stain Controller. These products are made to partially fill the pores of the wood and prevent the stain from building up.

STEAMED CHERRY

■ *I came across some cherry that really caught my eye — it was a lot darker than the salmon-colored cherry I'm used to seeing. I was told the cherry had been through a steaming process. Why is this done and what's the process all about?*

Andrew Albert
Fort Wayne, Indiana

Up until recently, steaming was limited to walnut. But now, some lumber processors are steaming cherry. It's a process that blends the pigments from the darker heartwood in with the lighter sapwood. Steaming cherry produces a darker, richer-looking wood, with an even color throughout the board — it helps mask the sapwood.

EYE APPEAL. "Cherry produced in one part of the country is not necessarily the same color as what's produced in other parts of the country — it doesn't have the same eye appeal," according to Jim Olson, a professor in the Forestry Department at the University of Kentucky.

Typically, cherry from the warmer growing regions (southern Indiana and Kentucky) has a wider band of sapwood and a grayer color than cherry from the colder growing regions (Pennsylvania and Wisconsin).

By steaming cherry to even out the color, processors have been able to turn logs into lumber that in the past may have only made it to the firewood pile.

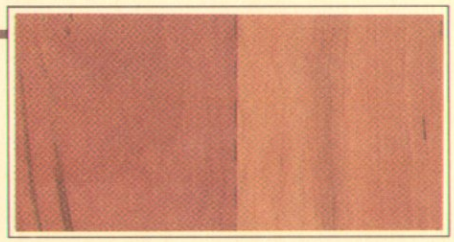

Steamed cherry (on left) is darker than "regular" salmon-colored cherry. It looks as if it's already developed a warm patina.

STEAMING. Steaming takes place while the wood is still green. It won't work on dried wood.

"Steaming usually lasts about 72 hours," according to Tom Koetter of Borden, Indiana. Tom, who's been steaming cherry for years says, "It all depends on how much lumber is being steamed at one time and how thick the lumber is you're working with."

Steaming takes place in a chamber that acts like a big pressure cooker. The boards are stacked on a rack suspended over a vat of water. Then the water temperature is brought up so the room is saturated with steam. Once the chamber's temperature reaches about 180°, it's held at that temperature for the entire steaming period.

As steam penetrates the wood, condensation begins to form. Then the pigment flows from the heartwood into the sapwood. Once steaming is complete, the wood is loaded into the dry kiln.

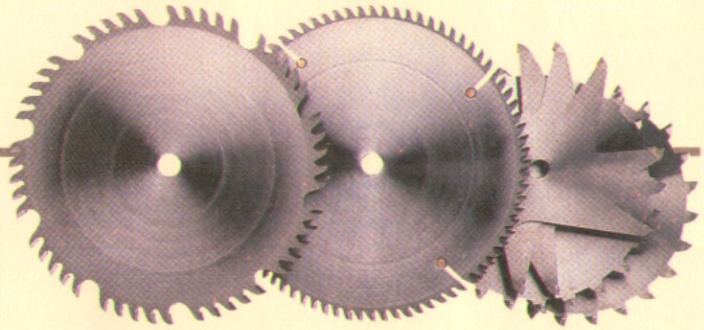

SAW BLADE SELECTION

■ *Over the years, most of my projects have been built from 2x4's and 1x4's. Now I want to start building some of the projects shown in* Woodsmith. *Which saw blades should I start out with for my 10" table saw?*

Allan Brandli
Liberty, Texas

When it comes to outfitting a shop with saw blades, it usually boils down to one thing — how much money you want to spend. Whether you're just starting out or have been woodworking for some time, I always recommend buying the best blades you can afford. It's like anything else — the best usually pays for itself over time.

COMBINATION BLADE. The first blade I recommend for the shop is a good carbide-tipped combination blade.

In the *Woodsmith* shop we use a Forrest Woodworker II (about $110 retail). But another good choice would be a Freud LU84M (about $50). (Note: See page 31 for sources of blades.)

A combination blade is designed for ripping and cross-cutting wood. As your budget permits, I would add a 24-tooth carbide rip blade (particularly good for ripping thick hardwoods), and a 60-tooth crosscut blade (this I use for cutting miters).

PLYWOOD BLADE. My next choice is a plywood blade. You can cut plywood with a combination blade but it will probably leave a rough edge.

Ideally what you're looking for is a blade with a lot of small teeth. Large teeth will tear out big pieces of wood. Smaller teeth will nip out small pieces producing a cleaner edge.

For plywood I use a Wisconsin Knife Works WKW-PL (08304). It's an 80-tooth carbide-tipped blade (about $80). But I've gotten good results in the past with a Sears 200-tooth *steel* plywood blade (about $13).

The big difference between these two blades is how long they stay sharp. We cut a lot of plywood in the *Woodsmith* shop, and the carbide teeth on the WKW-PL stay sharp longer. But this is one time I'd recommend spending less.

Many woodworkers don't cut large amounts of plywood. If you don't, you might consider the Sears steel blade (or one similar to it). One nice thing about this saw blade is that when it becomes dull you can spend around $6 to have it sharpened, or just buy a new one.

STACK DADO SET. Next you should consider a stack dado set. This is a set of blades that are used to cut rabbets and dadoes. They're not cheap — a good set sells for $100 or more.

There are less expensive "wobble" type dado blades on the market, but I don't recommend them — they don't produce a flat bottom.

In the *Woodsmith* shop we use a Forrest 8" stack dado set (about $270). There are others that are almost as good but don't cost as much.

Freud and Delta both make excellent 6" and 8" sets ($110-$140). The 6" set cuts a 1½"-deep groove. This is more than adequate for most projects.

TEMPERED HARDBOARD

■ *Many jigs in* Woodsmith *call for "tempered" hardboard such as Masonite. But I'm having a hard time locating it. It seems the local suppliers I'm dealing with are selling regular hardboard for tempered hardboard. Is there any sure way of telling one from the other?*

Henry C. Tunesi
St. Louis, Missouri

Other than taking the salesman's word for it, the only way to tell if it's tempered or not is to look for yourself. To do this, you'll have to walk out into the lumber yard and look at the stack of hardboard. (By the way, Masonite is just one brand of hardboard — there are many other brands available.)

If the manufacturer of the hardboard is a member of the American Hardboard Association (AHA), you're in luck. The AHA has adopted standards set by the American National Standards Institute (ANSI) for labeling and marking the five different "classes" of hardboard.

Of the five classes, "service tempered" and "standard" are the two most often found in 4x8 sheets. "Service tempered" is what we use most often in our jigs — it's been treated with additives to make it harder and more water resistant than "standard" hardboard.

WHAT TO LOOK FOR. Hardboard is shipped from the factory in big stacks. Prior to shipment, each stack is marked according to what class it is. These markings can be found running down the sides of the stack, see photo. (It's a little hard to see the marking on the edge of a single sheet. That's why you'll have to look at the whole stack.)

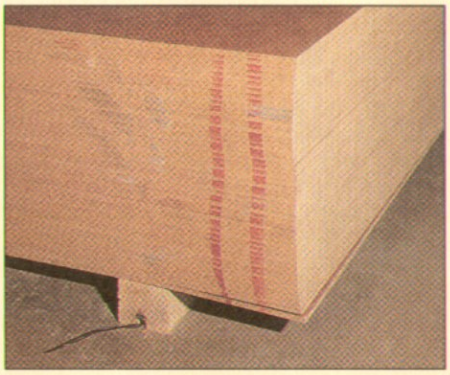

It's easier to see hardboard "class" markings by looking at the whole stack. The markings should be on at least two corners.

"Service tempered" hardboard is marked with two red stripes, and "standard" is marked with one green stripe. The location and exact color of the stripes may vary slightly between manufacturers.

PROBLEM? QUESTION?

Solving a problem (or avoiding one in the first place) is part of every project. But the best solutions aren't always obvious — they often come from one who's faced the problem before.

If you have a problem, solution, question, or even a gripe, maybe we (or another reader) can help. Just write to *Woodsmith*, Talking Shop, 2200 Grand Avenue, Des Moines, Iowa 50312.

Drafting Cabinet

There never seems to be enough clear space for making notes in the shop. That's what this Drafting Cabinet is for — to add a place for drawing and storing plans. Without taking up floor space.

Woodworkers tend to think with their hands. When I get an idea about a better way to build a project, I'll draw a picture. If there isn't any paper around, I'll draw on a scrap piece of wood, or even the wall.

That's what this Drafting Cabinet is designed for. It's a dedicated work station for designing in the shop. Fold down the door and there's a work surface large enough for a 14" x 17" piece of drafting paper and a 24" T-square. When the door's closed, the cabinet only sticks out 7" from the wall. (It takes up *no* floor space.)

OPTIONS. A bulletin board can be installed inside to hold drawings for projects that are underway. Also, there's a rack that can be built to keep things organized inside (see page 27).

MATERIALS. I built the cabinet from birch. The door has a birch plywood panel with a solid birch frame. Birch is a good material for shop fixtures — it's strong and clean looking.

To finish the project, I wiped on two top coats of General Finishes' Arm-R-Seal (satin).

SUPPLIES. If you use the Drafting Cabinet a lot, you should consider getting a set of drafting tools such as a T-square, and some triangles. But most important is a good drawing surface.

The inside of the door should be covered by a material you can draw on easily. (You don't want to poke through the paper.) A sheet of poster board works fine. But the best surface is a Borco cover. See page 31 for sources of drafting equipment, and also a kit with the hardware needed to build this Drafting Cabinet.

NOTES ON DESIGN. To learn more about what went into the design of this project, see the article beginning on page 28.

EXPLODED VIEW

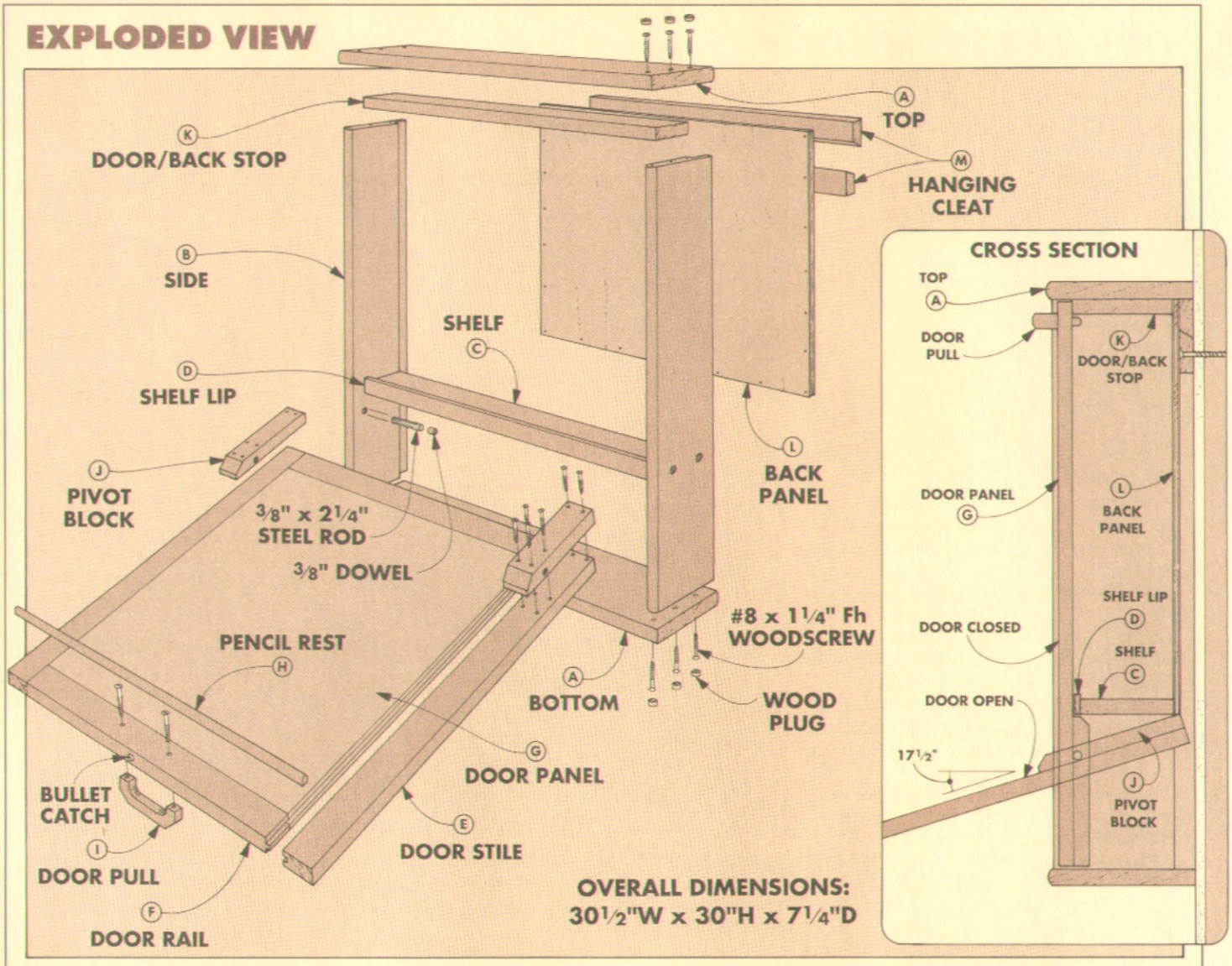

CUTTING DIAGRAM

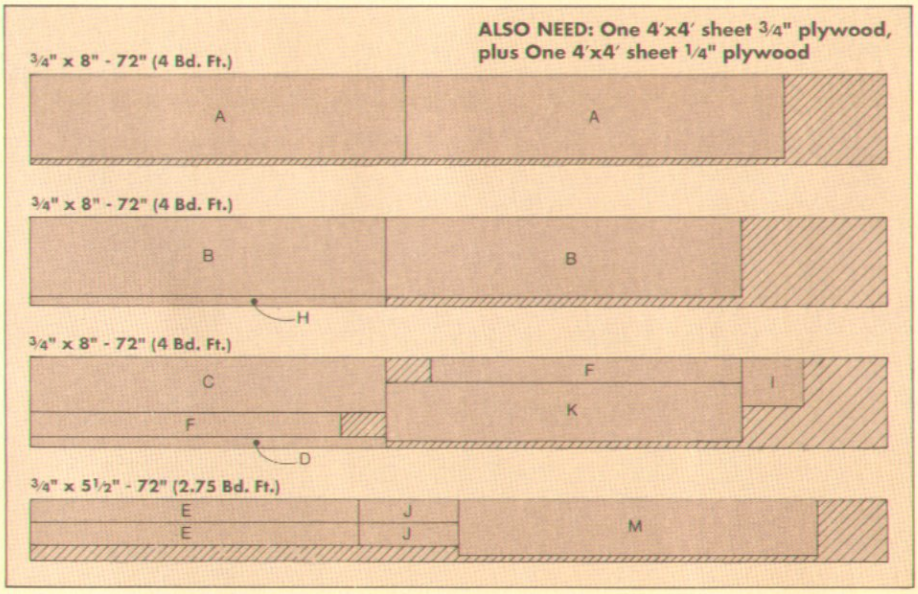

MATERIALS

WOOD PARTS

A	Top/Bottom (2)	3/4 x 7 1/4 x 30 1/2
B	Sides (2)	3/4 x 7 x 28 1/2
C	Shelf (1)	3/4 x 4 5/8 x 28 1/2
D	Shelf Lip (1)	1/4 x 1 x 28 1/2
E	Door Stiles (2)	3/4 x 2 1/8 x 28 1/4 (rgh)
F	Door Rails (2)	3/4 x 2 1/8 x 24 3/4 (rgh)
G	Door Panel (1)	3/4 ply - 24 3/4 x 24 3/4
H	Pencil Rest (1)	1/2 x 1/2 x 28 1/4
I	Door Pull (1)	3/4 x 1 1/4 x 5
J	Pivot Blocks (2)	3/4 x 2 x 7 1/2
K	Door/Bk. Stop (1)	3/4 x 5 x 28 1/2
L	Back Panel (1)	1/4 ply - 29 1/2 x 20 3/4
M	Hanging Cleat (1)	3/4 x 4 1/2 x 29 1/2 (rgh)

SUPPLIES

- (30) #8 x 1 1/4" Fh Woodscrews
- (28) 3/4" Wire Nails
- (2) 3/8" x 2 1/4" Steel Rod
- (1) 3/8" x 5/8" Bullet Catch
- 3/8" x 3 ft. Dowel Rod (or 16 Wood Plugs)

BUILDING THE CABINET

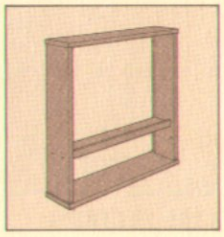

The Drafting Cabinet has two main components — a rectangular cabinet with a narrow shelf inside, and a pivot-down door.

I started by building the cabinet.

CUT PARTS TO SIZE. First, I ripped two pieces of stock to finished width (7¼") for the cabinet **top/bottom (A)**, see Fig. 1.

Next, rip two pieces for the cabinet **sides (B)**, see Fig. 1. These two side pieces are ripped ¼" narrower than the top and bottom to allow for a bullnose that will be routed on the front edge of the top and bottom.

The last piece to rip to width (4⅝") is the inside **shelf (C)**.

When all five pieces are ripped to width, cut them to their finished lengths, see Fig. 1.

RABBETS. The plywood back for this cabinet fits into a pair of rabbets that are cut along the back edge of the cabinet sides, see Fig. 1. In addition to the back, there's also a hanging cleat (M) for mounting the cabinet to the wall, refer to the Exploded View on page 23.

To accept both the back and the cleat, the rabbets have to be cut wider than usual. I cut them in two steps using a combination blade in the table saw.

The first cut is made with the piece lying on its face, see Step 1 in Fig. 2. This cut establishes the shoulder of the rabbet.

To complete the rabbet, reposition the rip fence and raise the height of the blade to make a second pass with the workpiece standing on edge, see Step 2 in Fig. 2.

BULLNOSE EDGES. Just because this Drafting Cabinet is designed for use in the shop doesn't mean it has to look rough. To make it look a little nicer, I used a ½" round-over bit to rout a bullnose on the *front* edge of all four cabinet pieces, and also on the *ends* of the top/bottom, see Fig. 3.

DRILL SCREW HOLES. Other than the rabbets for the back, there's no fancy joinery involved in building this cabinet. All five pieces are joined with butt joints and held together with woodscrews.

To locate the screw holes for attaching the top and bottom to the cabinet sides, first clamp these four outside pieces together.

Note: The top and bottom are positioned so there's a ¼" overhang on the sides and front edges of the cabinet, see Fig. 1a.

ASSEMBLE CABINET. When the cabinet is clamped together, drill pilot holes and counterbores for the screws. Also drill a hole in both side pieces for the pivot pins, see Fig. 1. Then the cabinet can be assembled with screws and glue.

Next, the shelf can be installed. I used a pair of spacer blocks to hold the shelf in place while drilling the screw holes, see Fig. 4.

After the shelf has been screwed to the cabinet, the screw holes can be plugged with short lengths of ⅜" dowel or wood plugs.

Finally, cut and glue a ¼"-thick **shelf lip (D)** on the front edge of the shelf, see Fig. 1.

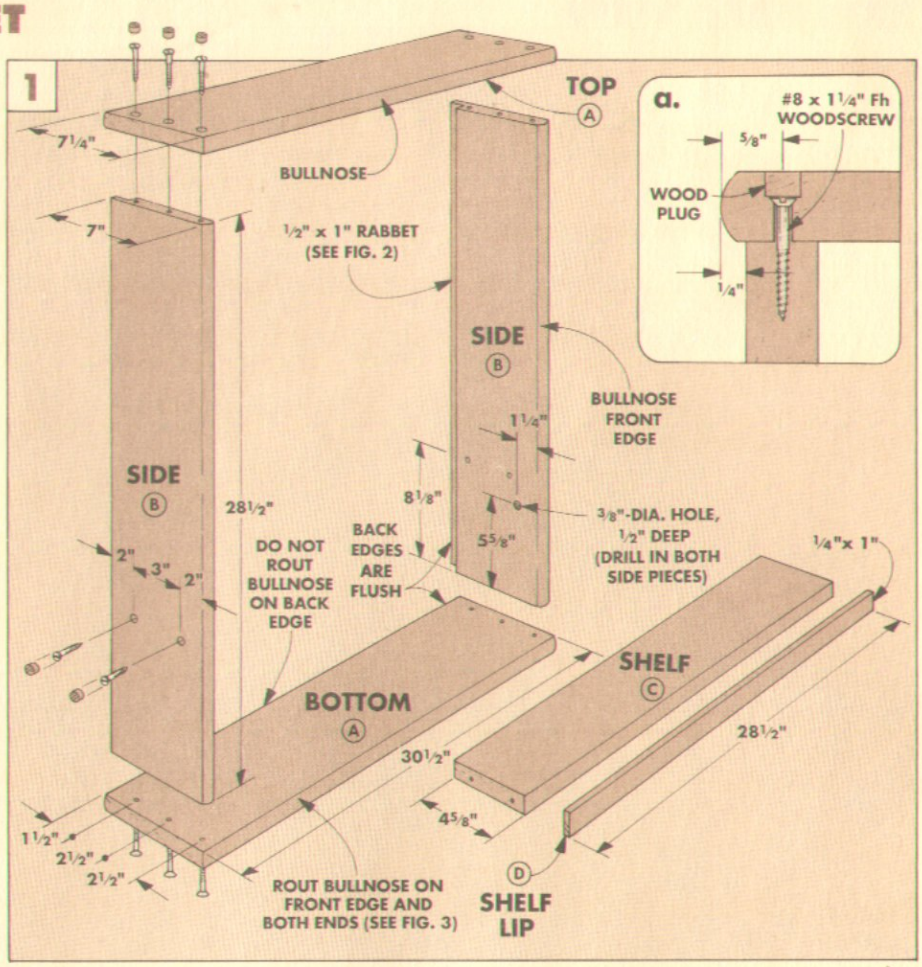

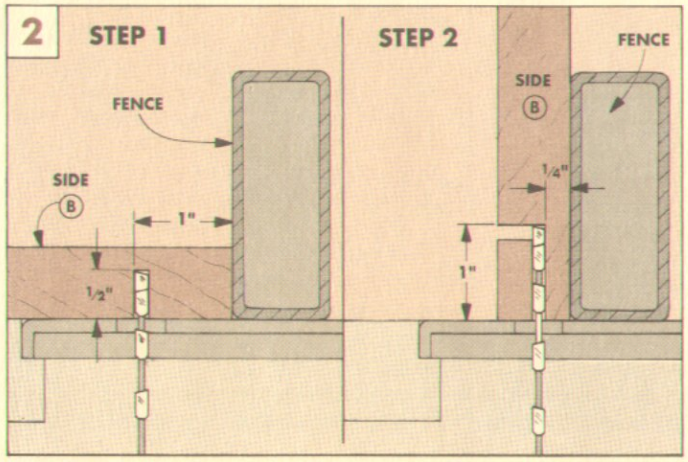

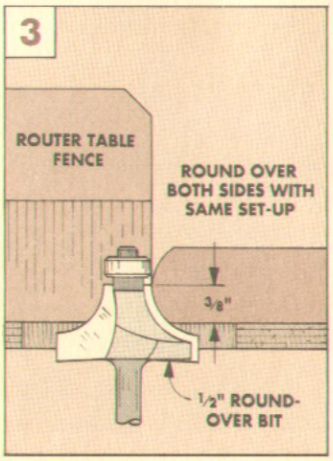

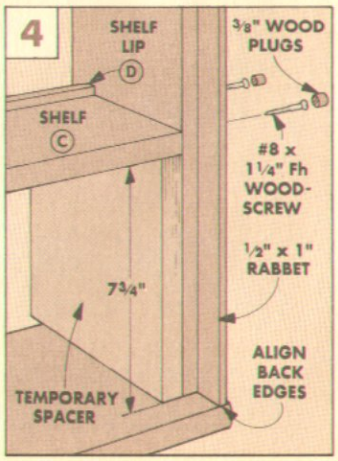

BUILDING THE DOOR

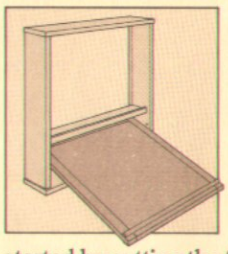

The actual working surface of the Drafting Cabinet is a door that folds down from inside the cabinet. The door consists of a piece of ¾" plywood surrounded by a hardwood frame. I started by cutting the frame pieces.

EQUAL GAP. In order to operate smoothly, the door fits in the cabinet with a ⅛" gap all around. But it's easiest to first build the door to fit the opening tightly. Then, later on you can trim an equal amount off all four edges to achieve a uniform gap.

RAILS & STILES. I started by ripping four pieces of ¾"-thick stock to a rough width of 2⅛". Shop Note: For the best fit between the frame and the plywood panel, start with frame pieces the *exact* thickness of the plywood.

Then cut two **door stiles (E)** to length so they fit tightly between the top and bottom of the cabinet, see Fig. 5.

With the stiles in place in the cabinet, measure between them to determine the rough length of the two rails. Add ½" to this (for ¼"-long stub tenons on the ends of each rail) and cut two **door rails (F)** to this length, see Fig. 5.

CUT GROOVES. The plywood panel is joined to the frame with tongue and groove joints, see Fig. 6. I formed a ¼"-wide groove centered on the inside edge of each frame piece by making two passes on the table saw.

PLYWOOD. Now cut the plywood **panel (G)** to fit inside the frame, see Fig. 5. When measuring for this panel, don't forget to add ½" to both dimensions to account for the ¼"-long tongues that are cut in the next step.

CUTTONGUES. With the plywood panel cut to fit inside the frame, next cut a centered tongue on all four edges. Note: Sneak up on the thickness of the tongue until it just fits the grooves in the frame pieces, see Fig. 5a.

When the tongues have been cut on the plywood, cut a tongue on each end of both door frame rails (F) to fit the same grooves, see Fig. 6.

Now the door frame can be glued around the panel. Then drill a pair of holes centered on the width of the top rail for attaching the door pull, see Figs. 5 and 7a.

TRIM DOOR EDGES. The door should now fit the cabinet opening tightly. To make it open and close smoothly, you will have to trim it to finished size. To do this, just trim an equal amount (⅛", or one blade's width) off all four edges.

PENCIL REST. Before mounting the door inside the cabinet, cut a narrow strip of wood for a **pencil rest (H)** to keep pencils from rolling off the drawing board, see Fig. 7. Round over the top two edges using a ¼" round-over bit in the router table.

The pencil rest hides the screw holes for the door pull. But don't glue it in place just yet — first make the door pull (see right).

DOOR PULL

You can use almost any door pull to open the Drafting Cabinet. But to get one that matches the cabinet, I made my own from a piece of scrap birch.

Start with a 5"-long blank cut extra wide, see drawing. First lay out the dimensions for the holes on the inside of the handle, and the "ears" on the outside corners. Then drill the holes that define the arcs, and use a bandsaw to cut off the ears.

To soften the outside edges of the pull, I used a ½" round-over bit and routed a bullnose profile (like on the edges of the cabinet, refer to Fig. 3). Now rip the pull to finished width from the oversize blank, and clean out the waste area between the holes.

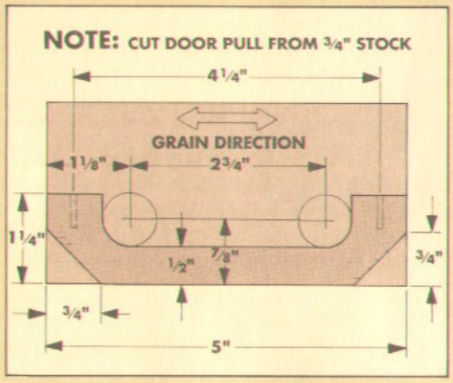

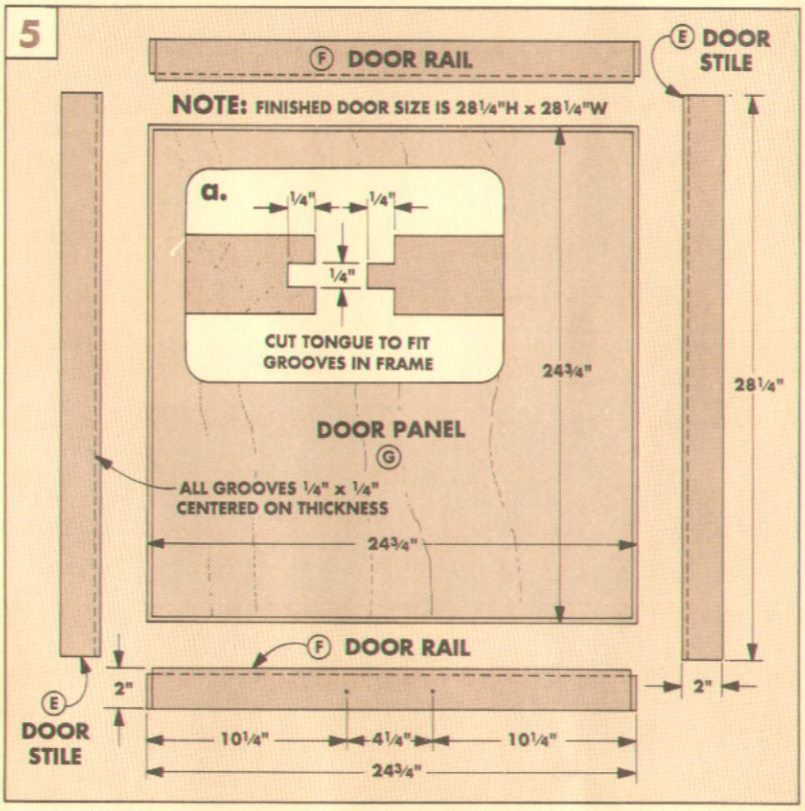

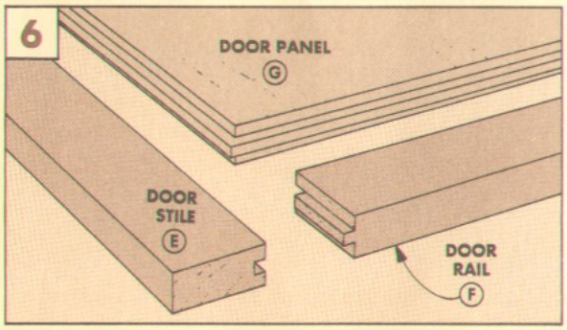

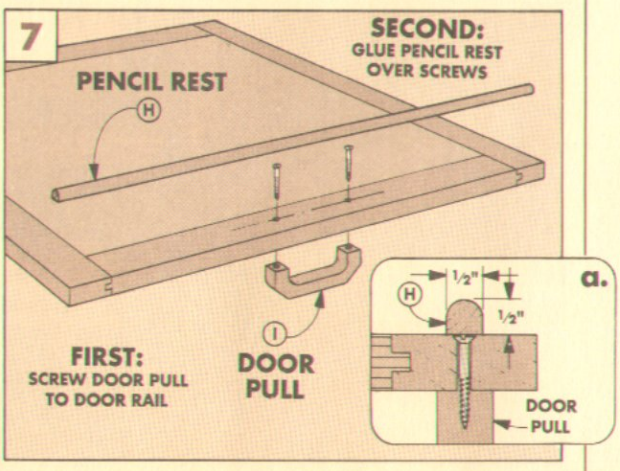

INSTALLING THE DOOR

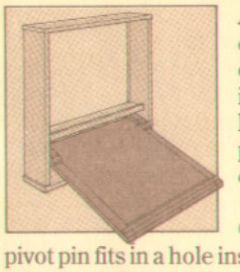

After the cabinet and door are built, the door can be installed in the cabinet. It's held in by two pivot pins that serve as door hinges.

PIVOT BLOCKS. One end of each pivot pin fits in a hole inside the cabinet. The other end fits into the door. But for added strength, the pin doesn't go into the door frame itself — it fits in a hole in the pivot block attached to the door frame, see Fig. 9.

To make the **pivot blocks (J)**, first cut two pieces of ¾"-thick stock to finished width and length, see Fig. 8. Then cut a 45° bevel across the front end of each block, leaving a ¼"-wide decorative edge.

PIVOT PIN HOLES. Drilling the holes for the pivot pins can be tricky. That's because the holes must be as close to the inside edge as possible (about 1/16"), yet completely within the pivot block.

To drill the holes, first place a temporary fence on the drill press table. Then lower the bit and slide the fence up to the bit. Now, back the fence 1/16" away from the bit and clamp it to the drill press table, see Fig. 8a.

Shop Note: To ensure that the holes are drilled exactly the same distance from the end of each block, I used a stop block clamped to the fence.

SCREW HOLES. After the pivot holes have been drilled, the next step is to drill countersunk shank holes for the screws that attach the blocks to the door frame, see Fig. 9.

DOOR STOP. Before mounting the door in the cabinet, I cut a stop (K) for the door and plywood back, see Fig. 11. The purpose of this piece is to create a pair of rabbets on the underside of the cabinet top. The plywood back (L) fits against the back edge of the stop, and the pivoting door closes against the front edge of the stop.

To make the **door/back stop (K)**, first crosscut a piece of stock so it fits tightly inside the cabinet from side to side. Now, sneak up on the final width of the stop so when it's positioned flush to the rabbet along the back of the cabinet sides, the stop extends to a point 1" from the front edge of the cabinet side, see Fig. 11.

INSTALL DOOR. After the door/back stop is glued in place, the door can be installed in the cabinet. This is a two-step process. First, the pivot blocks are screwed to the back inside corners of the door, see Fig. 9.

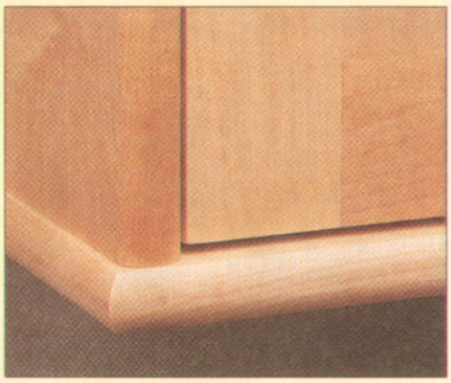

The second step is to position the door inside the cabinet and tap the pivot pins into the holes in the cabinet sides, see Fig. 10.

When both pins are fully seated in the holes in the cabinet, adjust the door for an equal gap on both sides. Now, with a temporary spacer holding the door in this position, tap a length of ⅜" dowel into the holes, see Fig. 10a. Then trim the dowels flush.

BULLET CATCH. To keep the door "locked" in the closed (up) position, I installed a bullet catch centered on the top edge of the door, see Fig. 11. When the door is closed, the bullet catch fits into a "dimple" in a strike plate attached to the underside of the cabinet top, see Fig. 11a.

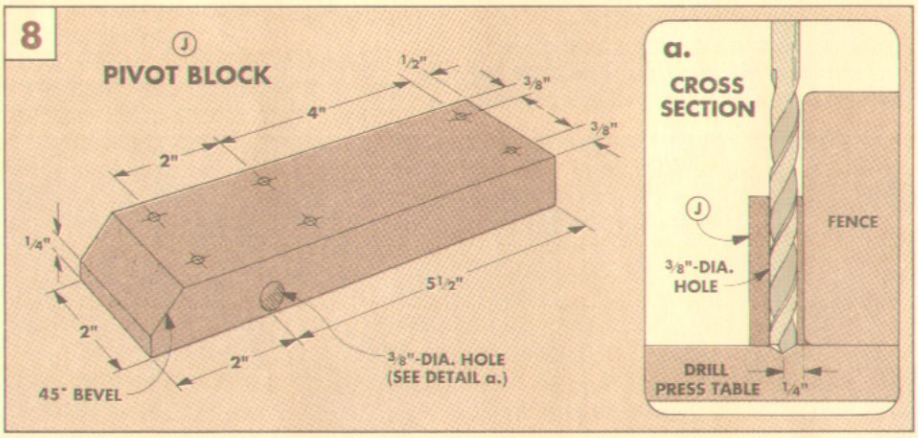

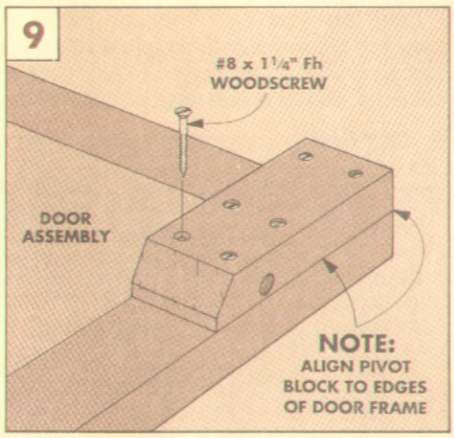

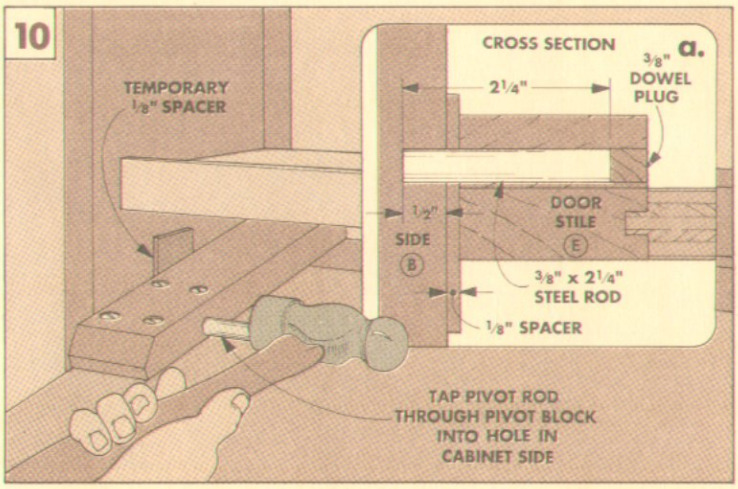

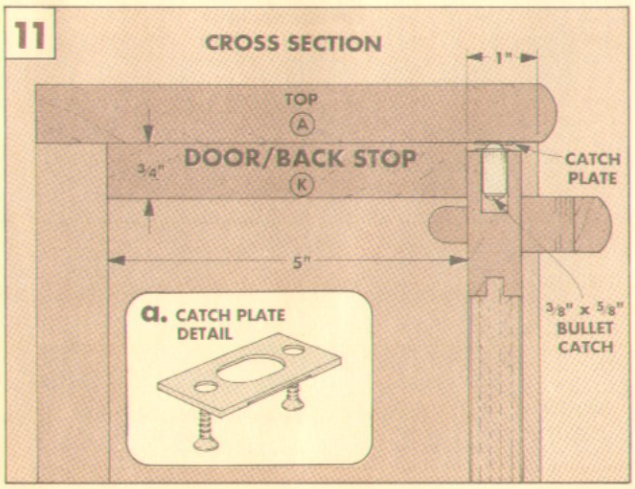

INSTALLING THE BACK

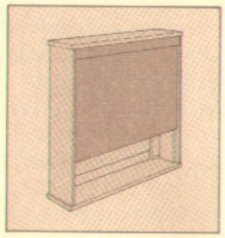

Before hanging the drafting cabinet in your workshop (or wherever else you want it), there are a couple more things to be done. First, a piece of plywood is installed in the back.

PLYWOOD BACK. The plywood back fits in the rabbets cut on the inside edges of the cabinet sides. But the back doesn't have to extend all the way to the bottom of the cabinet. (You can't see below the shelf when the door is open anyway.)

So I cut the ¼" **back panel (L)** to width to fit in the rabbets from left to right, see Fig.12. But I cut it to length so it extends from the cabinet top just to the bottom edge of the shelf. Then it can be glued and nailed into the rabbets on the back of the cabinet.

HANGING CLEAT. The last thing that needs to be done before hanging the cabinet is to make the cleat that holds it to the wall. To make the **hanging cleat (M)**, start out with a piece of ¾"-thick stock at least 4½" wide, see Fig. 12a.

Cut this blank to length to fit across the back of the cabinet.

Next, adjust the table saw blade for a 30° bevel, and rip the cleat blank to produce two 2"-wide hanging cleats.

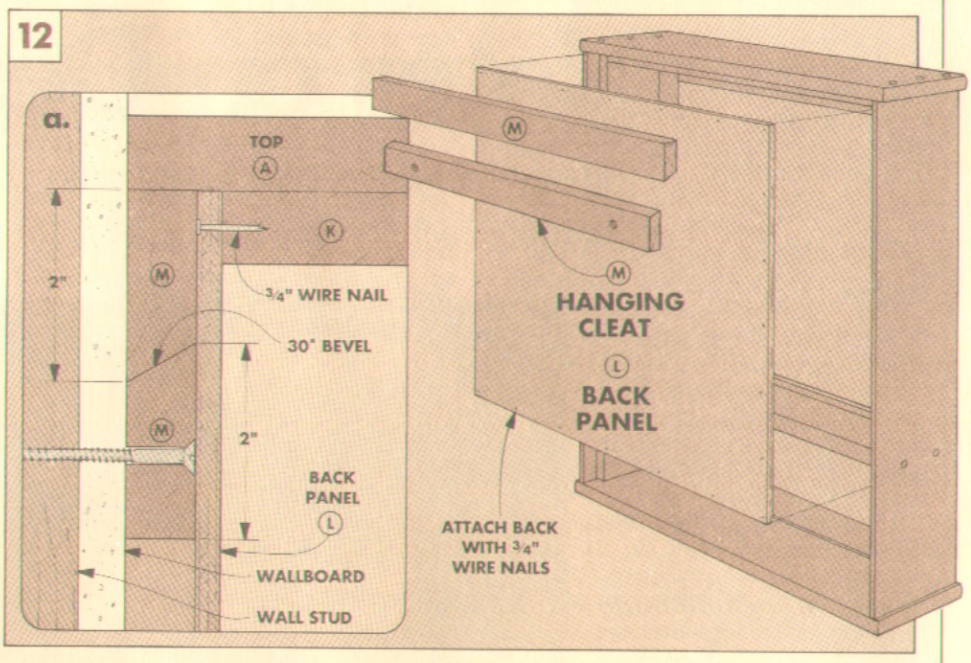

Now glue one of the cleats to the top of the cabinet at the back, see Fig. 12.

Then drill a pair of countersunk shank holes in the other cleat, see Fig. 12.

Shop Note: It's easier to hang the cabinet if this second cleat is cut a little *shorter* than the one attached to the cabinet.

Now screw the second cleat into a pair of wall studs so the door is at a height that's comfortable for drawing. (Refer to Mounting Height on page 29 for information on determining the most comfortable height.)

Finally, hang the cabinet on the wall so the mating cleats interlock, see Fig. 12a.

ORGANIZING THE INSIDE

There's quite a bit of room inside the drawing cabinet — so it's a natural place for things to accumulate. To keep things organized, I built a storage rack to sit on the shelf. But first I installed a bulletin board into the back of the cabinet, see Fig. 1.

BULLETIN BOARD. You can make your own bulletin board by fastening a piece of acoustic ceiling tile to the plywood cabinet back and covering this with a ⅛"-thick sheet of cork, see Fig. 2.

If you don't want to make your own bulletin board, an even easier (and probably less expensive) way is to buy a bulletin board with a frame around it. Then cut away the frame and fit the board inside the cabinet.

Either way, a bulletin board has to be held in place inside the cabinet. For this, the simplest thing to do is make stop molding, see Fig. 2a. Two strips of molding — one on each side of the bulletin board — are enough to hold the board in place.

STORAGE RACK. Besides a bulletin board, a storage rack is a handy thing to have inside the cabinet. It can hold a pad of standard-size (14" x 17") drawing paper, a 24" T-square, and other drafting materials, see Fig. 1.

This storage rack is like a corral fence — it's simply a pair of ends connected by two dowels. A notch cut in the upper back corners holds a T-square, see Fig. 3.

To hold the rack in place, screw up through the shelf into the ends of the rack.

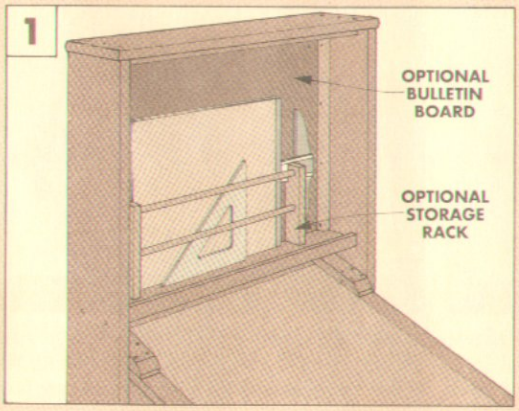

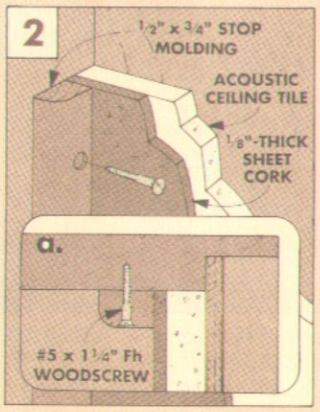

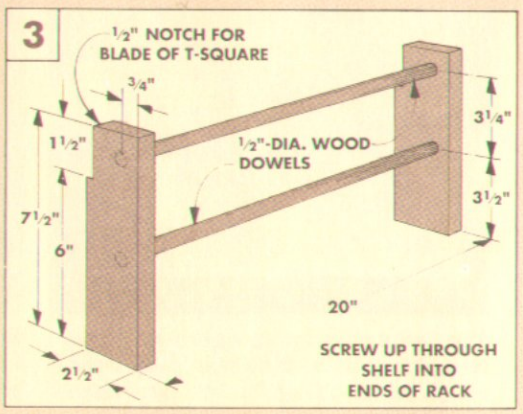

Notes on Design

The Drafting Cabinet isn't the same project that first came off the drawing board. It changed...but there were reasons.

The idea for the Drafting Cabinet on page 22 came up as I was working in the shop. I needed an area for making some quick sketches. But all the usual places were cluttered with other projects. What I really wanted was a drafting surface.

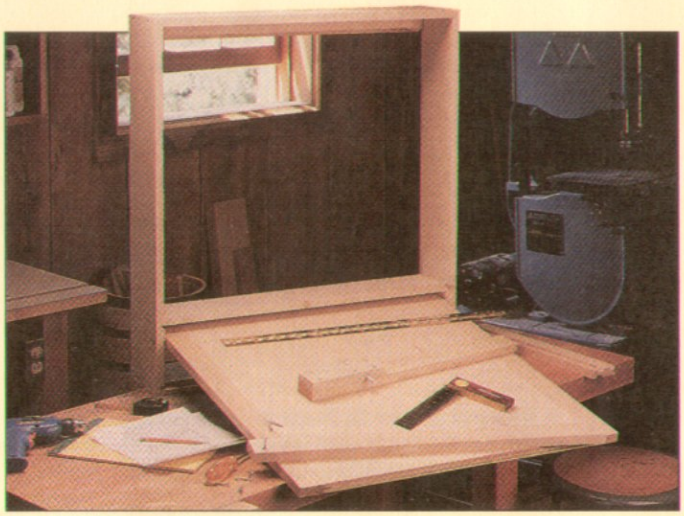

FEATURES. All projects start by defining what you need. Since floor space is at a premium in the shop, I decided to hang it from the wall. It had to be large enough for a T-square and drafting paper. With room inside to hold drafting supplies.

ROUGH SKETCHES. The first thing that happened on this project was that I got together with Ken (our Design Director) to make some rough sketches, see photo on the left below. The self-contained cabinet had a fold-down front, with room inside for the drafting supplies I thought I needed.

EVALUATION. Next we compared ideas — the best wood to use, the overall dimensions, how it attaches to the wall. Quickly the design was changing. In re-thinking the fold-down front, Ken noticed that drop-front supports we originally sketched may not work so well after all. They would limit the distance you could slide a T-square.

And being angled (I liked that idea) there should be something to keep pencils from rolling off the front edge of the open door.

CHANGES. We sketched out our revisions and Ken worked up a new drawing, see second photo below. The bottom of the cabinet had become a shelf that held the open drawing surface at an angle.

DETAILED DRAWINGS. Next, Ken made some full-size drawings. Including details of the combination door-pull/pencil-rest with exact specifications, and also how the door would fold down and stop at an angle when it hit the bottom of the shelf.

The detailed drawings also showed the dimensions of the joinery that would hold the top, sides, and back panel together.

PROTOTYPE. The design of the Drafting Cabinet was ready for a shop test. So we built a full-size prototype from scrap wood.

In this case, the prototype proved very helpful. We found that the hinge system for the door wouldn't be strong enough because of the leverage of the open door on the hinge. Also, the door pull worked great, but a simpler design would make the door frame symmetrical, and make the project easier to build.

SHOP DRAWINGS. We re-built a section of the cabinet to test the new hinge arrangement. All the changes seemed the best solution to the original problems, even though some details were a compromise to keep with the overall design.

The last thing Ken did before building the Drafting Cabinet (see page 22) was to make a set of shop drawings, see box on page 30. The perspective drawing below was part of that series. Together, these showed the Drafting Cabinet from inside out — all the details needed to build the project.

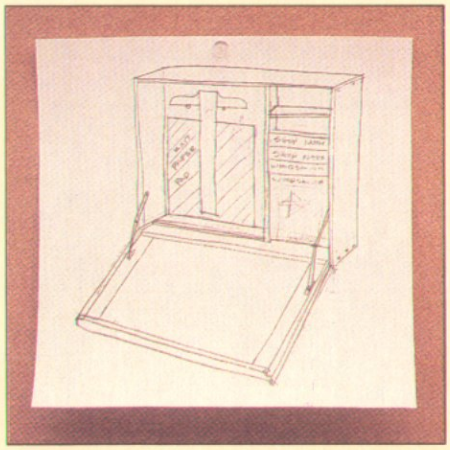

The first step in designing this project was to make a list of the needs, then draw a rough sketch. I wanted an uncluttered drawing area and a place for supplies.

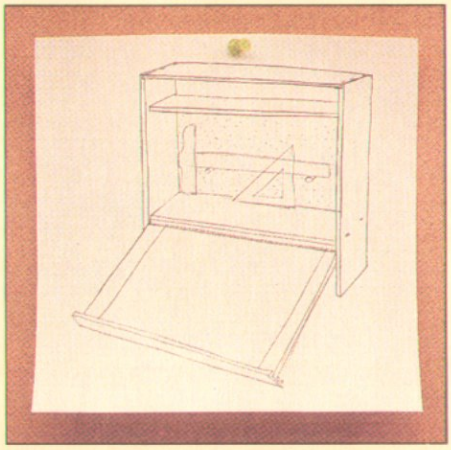

Subsequent drawings refined the original idea. The overall size, details of the joinery, and what the inside might look like were evaluated before a prototype was built.

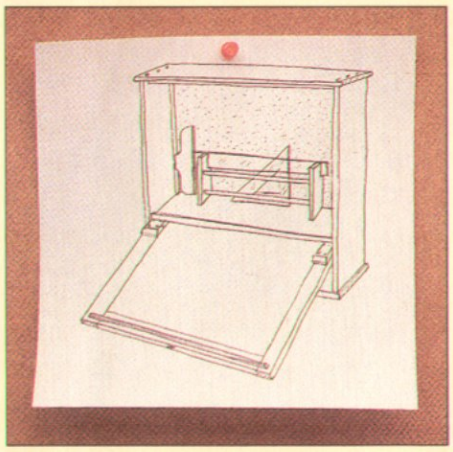

Changes continue after a prototype is built. The joinery is simplified, the hinging system strengthened. This drawing represents our best solution to the original needs.

JOINERY

The design of almost every project is an evolutionary process. It's usually a matter of one small change affecting several others.

After the basic size and shape of the Drafting Cabinet were decided on, we had to decide on the joinery.

RABBET. We planned to use rabbet joints to attach the top of the cabinet to the sides. Rabbets are one of the most straightforward joints you can cut. But after building the prototype of the cabinet, a couple of problems came up.

For added strength, we wanted to use woodscrews to hold the cabinet sides to the top. But because of the thin wall of the rabbet, the screws couldn't be counterbored deeply enough to be hidden with wood plugs, see Fig. 1.

BUTT JOINT. So the design was changed. First, the rabbet was eliminated. Then the top was lengthened to overhang the sides, and we switched to a butt joint, see Fig. 2. With the rabbet eliminated, the top could now be reinforced with woodscrews. Simpler to build. But would it be as strong?

In this case, yes. Most of the weight of the cabinet (when it's hanging on the wall) isn't supported by the top. It's supported by a mounting cleat attached to the back panel.

ANOTHER PROBLEM. This all sounded like a good idea until we realized there was another problem. In the original design (using rabbets to join the top and sides), there was also a rabbet along the back edge of the top piece (to hold the back panel).

However, with the new butt joint arrangement, this rabbet would run through and show on the side of the cabinet as a notch.

So the rabbet on the top was eliminated. But then there wasn't any support for the back panel. Something else was needed. We decided to add a cleat along the back to act as a "built-up" rabbet, refer to Fig. 3.

DOOR STOP. At the same time, the door on the front of the cabinet needed a cleat to prevent it from closing too far, see Fig. 3. That was the original plan. Two cleats.

Then we realized the cabinet would be a lot simpler to build if the two cleats were replaced by one wide board, see Fig. 4. This still served the original purpose — it formed a rabbet for the back panel, and provided a stop for the door.

The final design (Fig. 4) ended up considerably different than the original plan (Fig. 1). But the cabinet looked better, it was simpler to build, and it was just as functional as the original design.

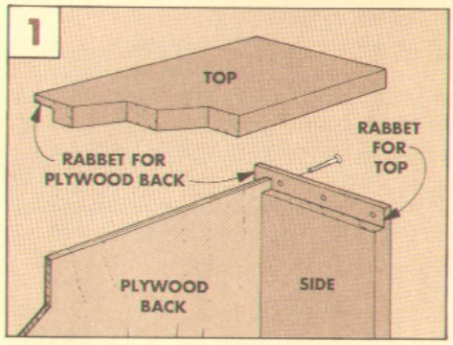

Originally, the Drafting Cabinet was designed to have the top screwed to the sides in a rabbet. Because it was designed for the shop, the front edges weren't rounded over.

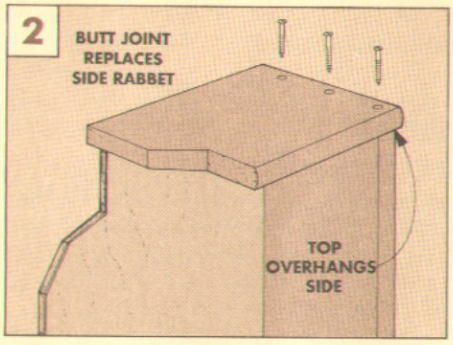

The top and bottom were changed to overhang the sides, and the pieces were screwed together with a butt joint. The front edges of the cabinet were softened with a bullnose.

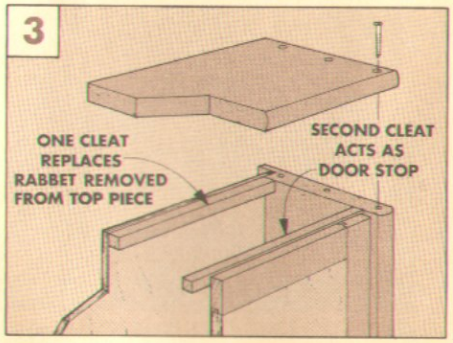

With the rabbet eliminated along the back edge of the top piece, other details had to change, too. Two small cleats were added to support the back and stop the door.

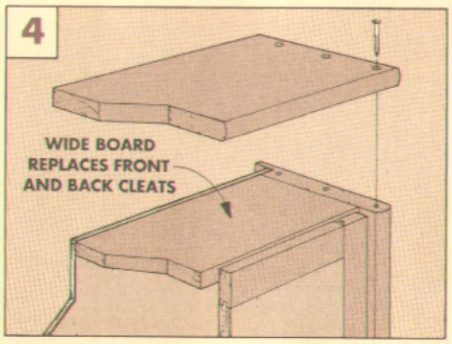

In the final design, the two cleats were replaced with a single wide piece of wood. All the changes in joinery had cleaned up the design and made it more efficient to build.

MOUNTING HEIGHT

Since the Drafting Cabinet is designed for hanging on the wall, there's a decision to make. How high off the floor should it be mounted? You'll have to experiment with what's most comfortable for you, but here are some guidelines that may help you decide. The first decision to make is what feels best . . . sitting or standing?

If you intend to use the cabinet mostly for drawing quick sketches, you may want to mount the cabinet for standing.

But, if you'll be using the Drafting Cabinet to design a lot of projects, you may prefer to mount it so it's comfortable for sitting.

SITTING

To determine the best height for sitting, the first consideration should be elbow height. The idea is to mount the cabinet so the drawing surface is at a height equal to the bottom of your elbow when your arm is bent, see drawing, below left. This should leave about 10" (or a range of between 8" and 12") as clearance for your knees.

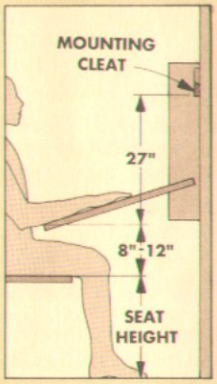

An average-height person sitting in a typical 17"-tall chair should be comfortable when the elbow is about 27" from the floor.

This means the mounting cleat should be screwed into the wall with the bottom edge about 54" off the floor. (For more information on the cleat mounting system, refer to page 27.)

STANDING

The rule for mounting the cabinet for standing is the same as for sitting — position it in relation to your elbow. If you've built the cabinet as specified in the plans, you'll probably find the most comfortable height to be where the wall cleat is mounted about eye level, see drawing at right.

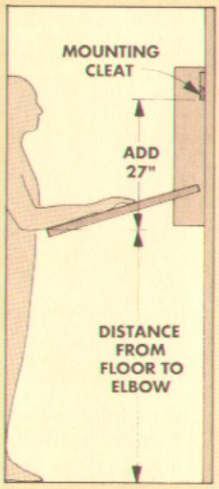

Again, you may want to experiment. If you want to switch from sitting to standing, no problem. Just mount two wall cleats — one for each position.

HINGES

The drop-down door and the way it's hinged to the cabinet are the keys to the design of the Drafting Cabinet. When the door is closed, the cabinet takes up very little room space. Then to serve as a drafting surface, the door pivots down and rests at a comfortable angle for drawing.

PIANO HINGE. The first system we designed for the door was simple and clever. The only hardware needed was a piano hinge. As the door tilted down, it would stop at the desired angle when the back edge hit the bottom of the shelf, see Fig. 1 below.

However, when the prototype was built, this hinging system had one problem. When you leaned on the front edge of the door (the drafting surface), it put a lot of leverage on the hinge. It tended to flex too much.

PIVOT PIN. To resolve this problem, we came up with the idea of mounting a pivot pin in the edge of the door frame. A steel pin would be plenty strong, but would the door frame split out? The solution here was an additional "pivot block," see drawing below. This block holds the pin, and helps steady the drawing surface.

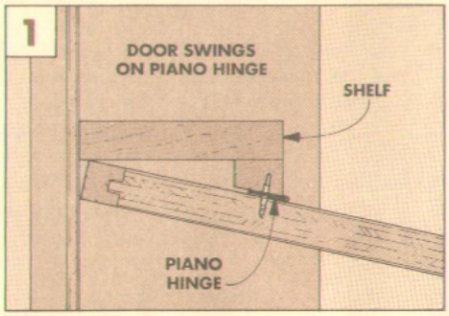

The original design called for a piano hinge to support the drawing surface. But the thin leaves of the hinge made the surface too "springy" when I leaned on it.

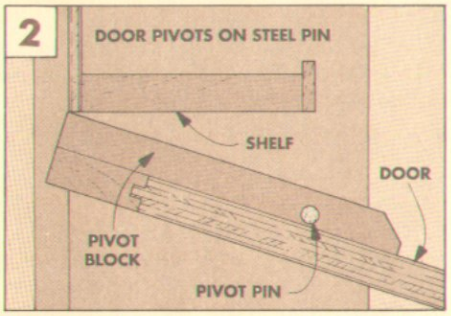

The piano hinge was changed to a steel pin. The pin fits into the cabinet side through a hole drilled in a pivot block. This system produces a more stable drawing surface.

DOOR PULL & PENCIL REST

Good design ideas don't always work out. That's what happened to the first handle for the door of the Drafting Cabinet, see drawing, below left. This handle was a solution to three problems.

First, it fit over the top edge of the door and concealed the plywood edge. Second, a shallow cove routed along the front edge made a good handle to grab with the fingertips. Finally, the inside edge of the piece acted as a pencil stop when the door was folded down for drawing.

AN EASIER WAY? The problem with this design was that it made building the door more difficult — the top rail was narrower than the bottom rail and stiles. It made more sense to enclose the panel with frame pieces the same width all the way around.

DOOR PULL. We decided that a wooden door pull would be a good alternative. The screw holes for the pull are hidden with a rounded-over strip of wood on the inside. This strip will also catch your pencil before it rolls off the drafting surface.

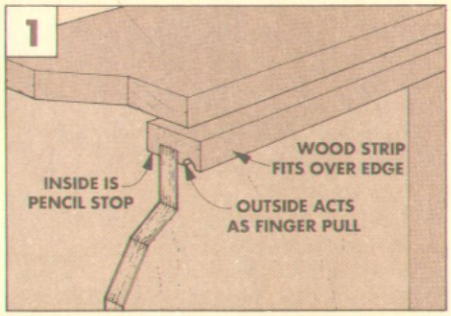

As a solution to several problems, the original door pull was a very good design. But because this piece was unique, it affected the overall appearance of the cabinet.

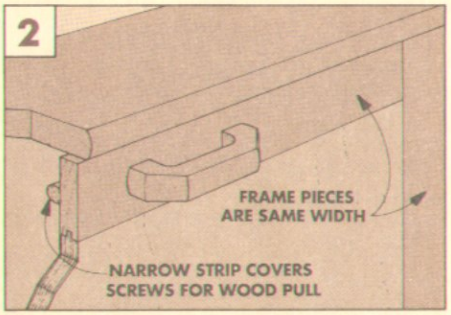

In the final design, the door has wider frame pieces all cut the same way. The pull is screwed on separately, and the screw holes are hidden by a pencil stop inside.

SHOP DRAWINGS

Every project I build starts with a detailed series of plans. But the drawings don't have to be complicated. The idea is to answer all the woodworking questions — the dimensions of each piece, the size and placement of the joints, and how the hardware is mounted — before beginning.

You don't have to be a draftsman to design projects. A basic set of drafting tools (see photo) can help transfer ideas onto paper. The place to start is with rough sketches, then create a set of shop drawings.

TO SCALE. All drawings should show the project to scale. If it's a large project, use a small scale (like one inch equals one foot). For a small project, full-size drawings are the best. At minimum, you'll need three separate views of the project.

FRONT VIEW. The first drawing to make is a front view. This drawing shows the *height* and *width* of the project. It should also show interior details, such as shelves, doors, or anything else you'd see looking at the project from the front.

TOP VIEW. A top view shows the *depth* of the project. It's made by first extending a pair of lines up from the front view. These indicate the sides of the project. Then, an intersecting pair of lines are drawn to show the front and back edges. The top view should also show the position of any interior pieces.

SIDE VIEW. Normally the last drawing that's needed is a view of the project from the side. A side view helps you see interior pieces and joints from a different angle.

OTHER DETAILS. Additional detail drawings help show critical parts of a project, like the joinery or a rounded-over edge. These drawings are best shown actual size.

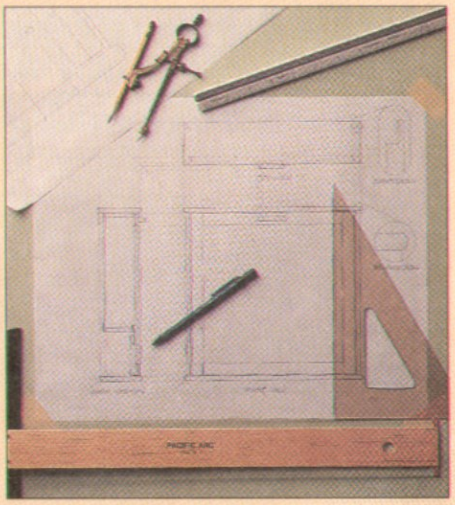

After a prototype had been tested, a set of shop drawings was made for the Drafting Cabinet. For most projects, these drawings show at least three different views.

Sources

BOOK STAND

Woodsmith Project Supplies is offering a hardware kit for the Book Stand shown on page 6.

Book Stand

W782-100 Book Stand Hardware Kit $7.95

- (3) Solid Brass Hinges with Screws, 2" Open Width, 1½" Long
- (4) Table (Desk) Top Fasteners, Countersunk Holes, Supplied with No. 8 x ¾" Flathead Screws

MICRO-ADJUSTABLE FENCE

The Micro-Adjustable Fence shown on page 13 can be built with hardware that is commonly available at local hardware stores and building centers. (You could use standard wing nuts instead of the large plastic T-knobs shown in the article.)

Woodsmith Project Supplies is offering a hardware kit to build the Fence that includes the large plastic T-knobs. (Note: Wood is not included.)

Micro-Adjustable Fence Hardware

W782-200 Micro-Adjustable Fence Hardware Kit.....$4.95

- (2) 5/16" x 3" Carriage Bolts
- (1) 5/16" x 1¾" Carriage Bolt
- (3) 5/16" Zinc Washers
- (3) Plastic T-Knobs with 5/16" Insert

DRAFTING CABINET

All of the hardware to build the Drafting Cabinet as shown on page 22 is offered in a kit from **Woodsmith Project Supplies**.

Drafting Cabinet

W782-300 Drafting Cabinet Hardware Kit $5.95

- (1) Bullet Catch with Strike Plate and Screws
- (2) Steel Rods, ⅜" Dia. x 2¼" Long
- (1) ⅜" Birch Dowel, 12" Long
- (16) ⅜" Flathead Birch Screw Hole Plugs
- (30) No. 8 x 1¼" Flathead Woodscrews

FINISH. We finished the Drafting Cabinet with a coat of General Finishes Sealacell as a sealer and two coats of General Finishes Arm-R-Seal.

Sealacell Sealer (Clear)

W4003-501.....$5.95 pint
W4003-601..... $9.95 quart

Arm-R-Seal Oil and Urethane Top Coat (Satin)

W4003-520.....$6.45 pint
W4003-620..... $9.95 quart

DRAFTING SUPPLIES

Local art supply stores usually offer a variety of drafting tools and vinyl drawing board covers. (Borco is one common brand of board cover.) One mail order source for drafting equipment is Dick Blick, see phone number in "Mail Order Sources" below.

ROUTER BITS

We used a variety of router bits to build the projects in this issue. **Woodsmith Project Supplies** is offering these high-quality, carbide-tipped bits. Order the shank size to fit your router.

Router Bits

W1514-811 ⅛" Round-Over Bit (¼" shank) $23.95
W1512-821 ⅛" Round-Over Bit (½" shank) $26.95
W1514-814 ¼" Round-Over Bit (¼" shank) $23.95
W1512-823 ¼" Round-Over Bit (½" shank) $24.95
W1514-819 ½" Round-Over Bit (¼" shank) $26.95
W1512-828 ½" Round-Over Bit (½" shank) $28.95
W1514-612 ⅜" Straight Bit (¼" shank) $11.95
W1512-669 ⅜" Straight Bit (½" shank) $13.95
W1514-170 Chamfer Bit (¼" shank) $21.95
W1512-175 Chamfer Bit (½" shank) $23.95

STAIN CONTROLLER

On page 20 we talked about using a stain controller to limit blotching when staining. **Woodsmith Project Supplies** is offering McCloskey's Stain Controller & Wood Sealer.

Stain Controller

W4003-321 McCloskey's Stain Controller & Sealer.... $5.95 pint

MORTISING BITS

To drill the mortises for the Book Stand, we used a special mortising bit made by Vermont American. It's similar to a Forstner bit, but has a long flute to pull the chips out of a mortise. We use the bit on the drill press, see Fig. 3 on page 8.

Woodsmith Project Supplies is offering three individual sizes of these bits. (You need a ¼" bit for the Book Stand.) Or they can be purchased as a set.

W1505-647 ¼" Bit.....$8.95
W1505-650 ⅜" Bit.....$9.95
W1505-653 ½" Bit.....$10.95
W764-150 Set of 3 .....$28.95

SAW BLADES

On page 21 we answered a question about what saw blades we would recommend.

Forrest blades can be purchased from the sources below or direct from the manufacturer, call 800–733–7111.

Freud blades can be ordered from the sources listed below. Or call 800–334–4107 for dealers.

The Sears plywood blade is available through the Sears tool catalog and Sears retail stores.

Wisconsin Knife Works blades can be ordered from the source below. Or for the nearest dealer, call 800–225–5959.

For the nearest Delta dealer, call 800–438–2486.

ORDER INFORMATION

BY MAIL

To order by mail, use the form enclosed with the current issue. The order form includes information on handling and shipping charges, and sales tax. Send your mail order to:

Woodsmith Project Supplies
P.O. Box 10350
Des Moines, IA 50306

BY PHONE

For fastest service use our Toll Free order line. Open Monday through Friday, 7:00 AM to 7:00 PM Central Time.

Before calling, have your VISA, MasterCard, or Discover Card ready.

1-800-444-7002

Note: Prices subject to change after October, 1992.

MAIL ORDER SOURCES

Similar hardware and supplies may be found in the following catalogs. Please call each company for a catalog or information.

Bridge City Tool Works
800–253–3332
Forrest Saw Blades

Constantine's
800–223–8087
Table (Desk) Top Fasteners, Bullet Catch, Screw Hole Plugs, Router Bits, Freud Saw Blades

Dick Blick
800–447–8192
Drafting Tools, Vinyl Drafting Board Covers

Trend-Lines
800–767–9999
Screw Hole Plugs, Router Bits, Freud Saw Blades

Woodcraft
800–225–1153
Mortising Bits, Router Bits

The Woodsmith Store
515–255–8979
Forrest and Wisconsin Knife Works Saw Blades

The Woodworkers' Store
612–428–2199
Hinges, Table (Desk) Top Fasteners, Bullet Catch, T-Knobs, Screw Hole Plugs, General Finishes, Stain Controller

Woodworker's Supply
800–645–9292
Table (Desk) Top Fasteners, Bullet Catch, Screw Hole Plugs, Router Bits, Freud Saw Blades

Final Details

Book Stand

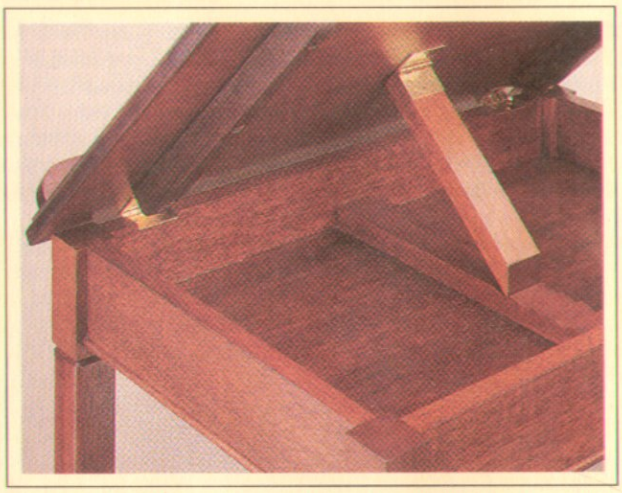

▲ *A simple shop-made ratchet system holds the top of the Book Stand in any of five positions. Solid mahogany and mahogany plywood make it attractive — even on the inside.*

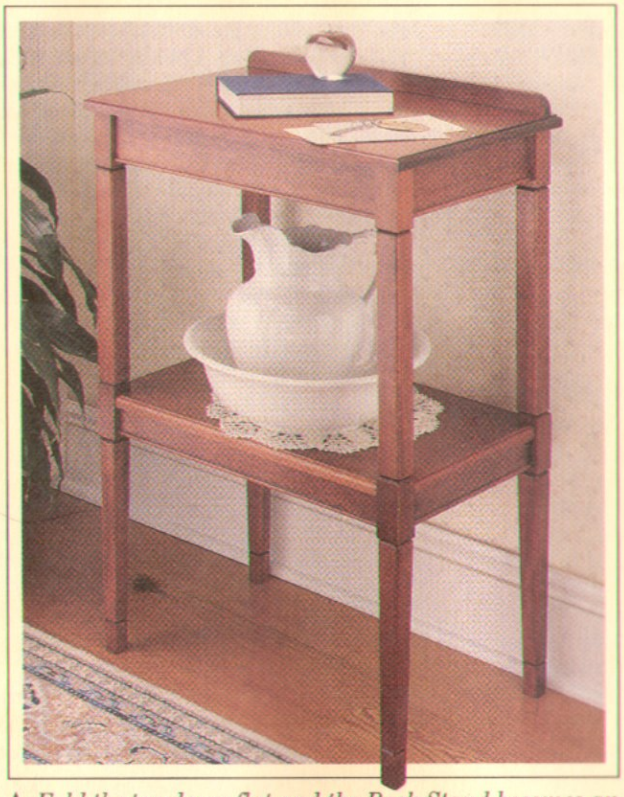

▲ *Fold the top down flat and the Book Stand becomes an attractive Side Table. It's shown here with legs tapered at the bottom. A V-groove all around creates a "foot" on each leg.*

Drafting Cabinet

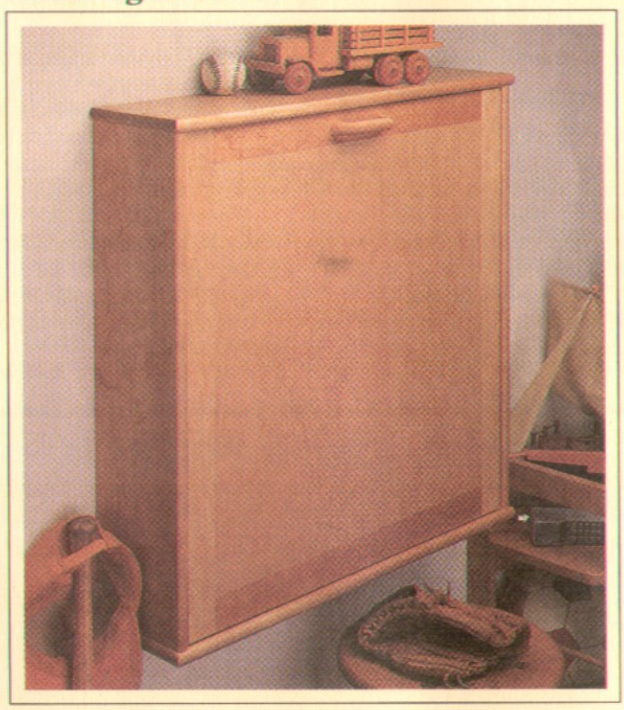

▲ *The Drafting Cabinet is designed to look good on any wall. In the kids' room, it's a fold-down study area. It's like a Murphy bed — perfect for an apartment or dorm room.*

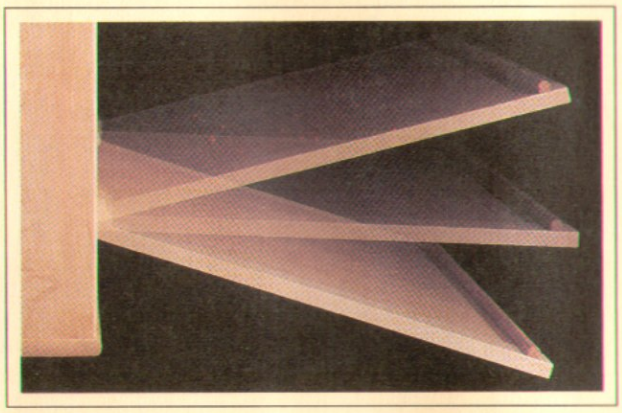

▲ *When it's open, the door of the Drafting Cabinet rests at an angle that's comfortable for drawing. A narrow strip across the front keeps pencils from rolling onto the floor.*